Reflexs

ORDER CODE: REFLEXS



TECHNICAL DRAWINGS

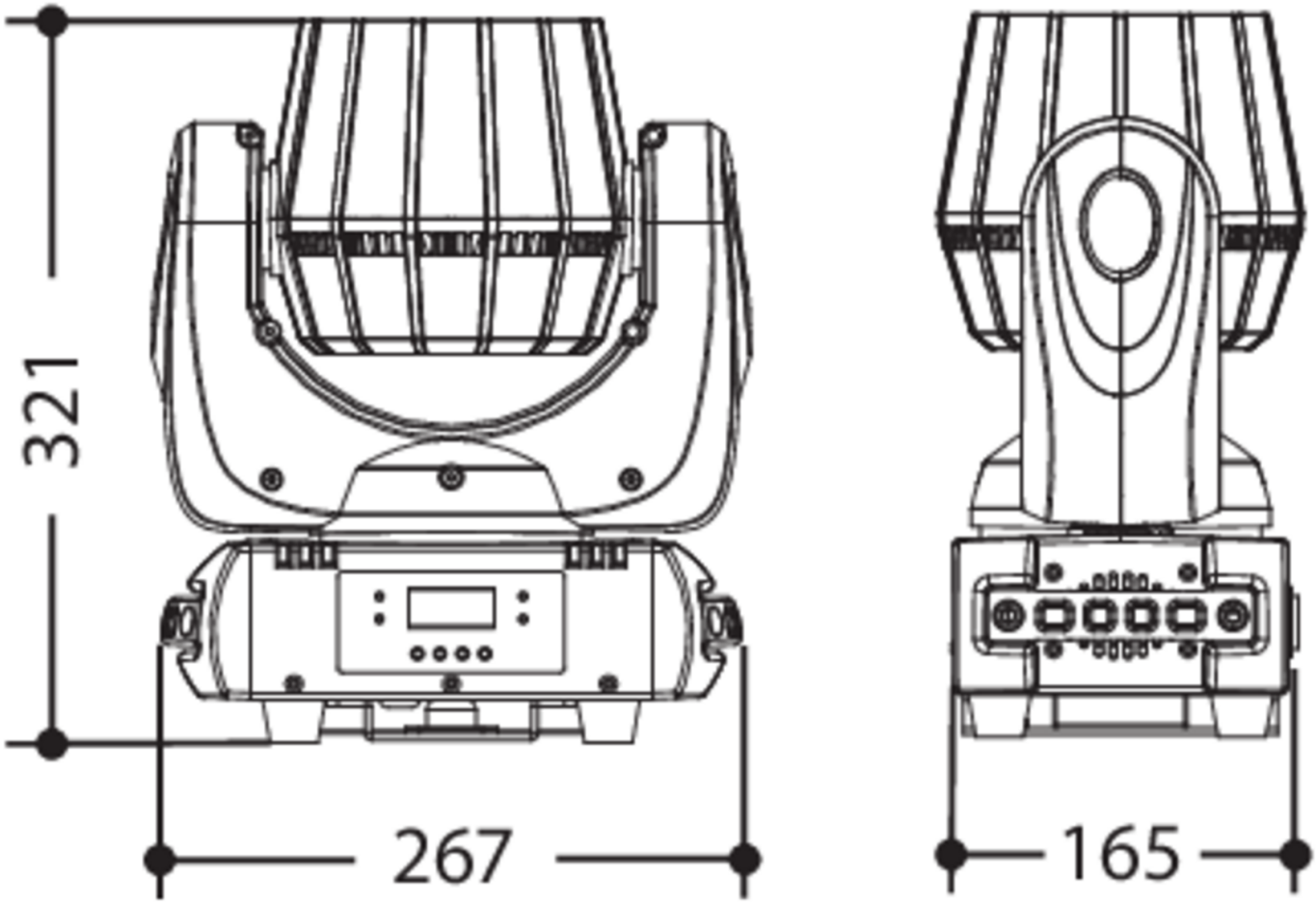

MUSIC & LIGHTS S.r.l.
Via A. Olivetti, snc
04026 - Minturno (LT) ITALY
info@prolights.it
Tel: +39 0771 72190
prolights.it
VAT No. IT 02057590594

Downloaded on 29/11/2026 - data may be provisional: features, specifications and appearance are subject to change without notice