SigmaPix 26BS1X1BF

ORDER CODE: SIGMAX26BS1X1BF



IP RATING		
IP30		

MAIN FEATURES

- Single person installation, auto lock design, scratch protection and flip corner shield
- Fast LED Module and PSU replacement
- Built in curve mechanics for +40° / -40° concave & convex
- Refresh rate of 3.840 Hz

Downloaded on 27/11/2026 - data may be provisional: features, specifications and appearance are subject to change without notice

TECHNICAL SPECIFICATIONS

VIDEO

Driver chip type:	MBI 5253
LED source:	Kinglight SMD 1515 full black
Pixel pitch:	2.6 mm
Panel resolution:	192x192pixels
Module resolution:	192x48pixels
Luminous flux:	1000nit
Contrast:	4.000:1
Grayscale:	14 bit
Refresh rate ≥:	3.840Hz
Drive Mode:	1/24 scan, constan current
Vertical viewing angle:	160°
Horizontal viewing angle:	160°
LED density:	147.456LED/sqm
Dead Pixel Ratio:	<0.002
LED avg life span:	100.000 h

ELECTRICAL

Power input/output:	IPKON Seetronic IN/OUT
Power supply:	AC 110/230 V 50/60 Hz
Max power consumption (panel):	120W
Avg power consumption (panel):	35W
Max power consumption (sqm):	480W
Avg power consumption (sqm):	140W
Standby power consumption (pannello):	35W
Max rated current/panel::	AC220V / 0.55A
Working temperature:	-10°C / +45°C
Working humidity:	10~80 RH%

PHYSICAL

IP rating:	IP30
Cooling:	fan-free with natural convection
Housing:	Die-cast aluminium housing
Finish:	black

CONTROL

Receiving card:	A8S-N
Other controllers type:	mapping, firmware copy, RCFGX restore, calibration restore, rotation supported, calibration chip on LDM (auto calibration)
Control protocol:	Novastar
Signal input:	waterproof Seetronic RJ45
Signal output:	waterproof Seetronic RJ45

MECHANICS

Other specifics:	curve configurations (mechanics on board), corner protection, bottom protection, auto-lock mechanics
Magnetic LED modules:	available
Module size (WxH):	500x125mm
Panel size(WxHxD):	500×500x83mm
Vertical hanging system:	built-in aliscaf clamp support
Connection:	seamless locking system
Panel weight:	8kg
Weight per square meter:	32kg
Hanging Panel Quantity ≤:	20 for hanging and 12 for stacking

INSTALLATION

Curve configurations:	convex and concave -40° / +40°

CERTIFICATIONS / REPORTS

Compliance:	CE, UKCA, cURus

Downloaded on 27/11/2026 - data may be provisional: features, specifications and appearance are subject to change without notice

ACCESSORIES & RELATED PRODUCTS



SXFCM80261X1
Flightcase 8 in1 for SIGMAX26B1X1BF and SIGMAX26BS1X1BF



KSXHGB01SLR
Fly bar / ground bar for SIGMAX26BS1X1BF



KSXCJB
Ground system back horizontal support for SIGMAX and KAPPAX series LED wall



KSXBS21
2in1 back support for SIGMAX and KAPPAX series LED wall for ground system fixing



KSXBS31
3in1 back support for SIGMAX and KAPPAX series LED wall for ground system fixing



KSXBSC
Back plate for SIGMAX and KAPPAX series LED wall for ground system fixing



KSXGHR
Ground system back horizontal reinforcement for SIGMAX & KAPPAX series LED wall



SX26BSXJ
Metal joint used to connect SIGMAX26BS1X1BF to SIGMAX26B1X1BF and KAPPAX26B1X1BF series



OXACL01
Power cable for LED display series, Seetronic, L.140 cm



OXACL10
Power cable for LED display series, Seetronic, L.10 m



SXDCL01
Data cable for SIGMAX LED display series assembled with RJ45, IP65, L 140 cm



SXDCL10
Data cable for SIGMAX LED display series assembled with RJ45, IP65, L 10 m

Downloaded on 27/11/2026 - data may be provisional: features, specifications and appearance are subject to change without notice

TECHNICAL DRAWINGS

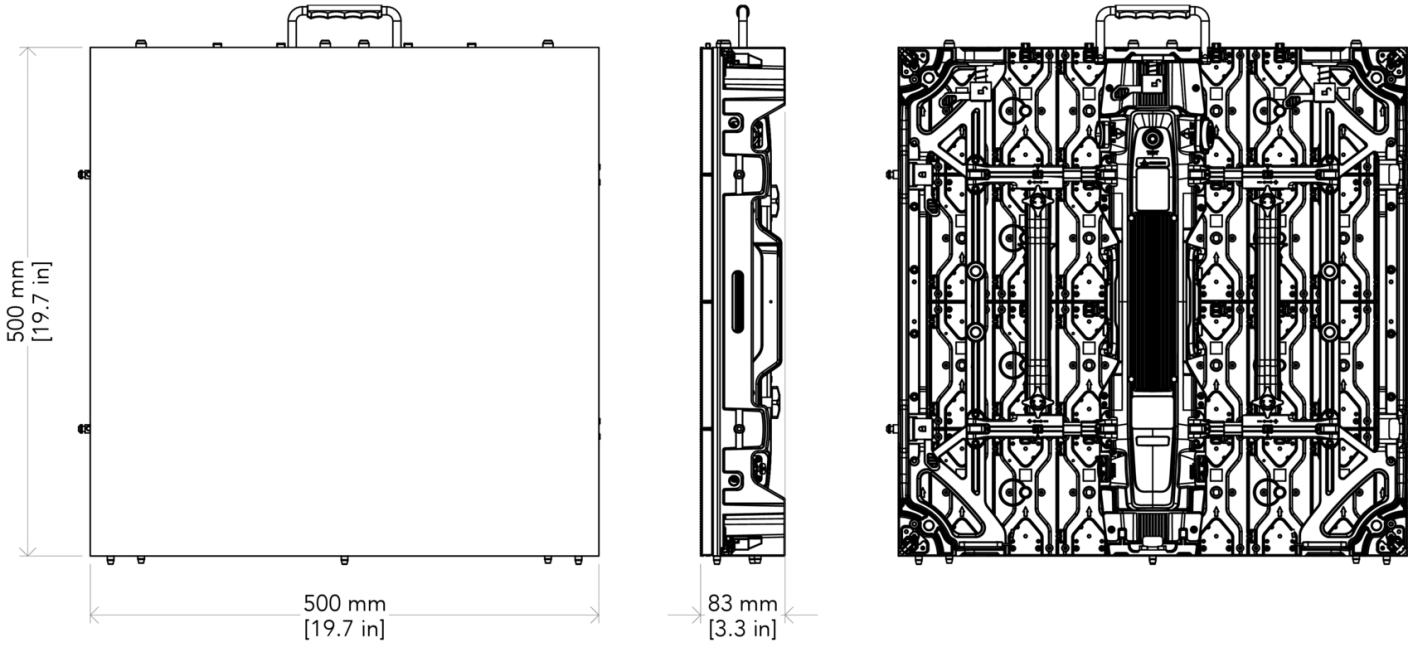

MUSIC & LIGHTS S.r.l.
Via A. Olivetti, snc
04026 - Minturno (LT) ITALY
info@prolights.it
Tel: +39 0771 72190
prolights.it
VAT No. IT 02057590594

Downloaded on 27/11/2026 - data may be provisional: features, specifications and appearance are subject to change without notice