# **Smart** Bat

ORDER CODE: SMARTBATBK




## VERSIONS

| | Code | Housing |
|---|---|---|
|  | **SMARTBATBK** | **Black** |
|  | SMARTBATWH | White |

| SOURCE | IP RATING | WEIGHT |
|---|---|---|
| **4x8W RGBW LEDs** | **IP33** | **3,4kg / 7.5lbs** |

Downloaded on 26/11/2026 - data may be provisional: features, specifications and appearance are subject to change without notice

# TECHNICAL SPECIFICATIONS

## LIGHT SOURCE

| | |
|---|---|
| Source: | 4x8W RGBW LEDs |
| Luminous flux: | 1'354 @Full |
| Lux: | 730lx @5 m full |
| Source life expectancy: | > 50.000 h |

## OPTICS

| | |
|---|---|
| Beam angle: | 14,9° |
| Lens diameter: | 42mm |
| Additional optics: | 25° and 45° optional |

## COLOUR SYSTEM

| | |
|---|---|
| White presets: | 3.200 K ~ 10.000K |
| Colour wheel: | virtual colour wheel with macros |

## DYNAMIC EFFECTS

| | |
|---|---|
| Static mode: | selection of static colour |
| Manual mode: | manual adjustment of colour |
| Auto mode: | built-in programs with execution speed adjustment |

## CONTROL

| | |
|---|---|
| Supported Protocols: | DMX512 |
| DMX channels: | 4 / 6 / 10ch |
| Display: | LED display user interface |
| IR: | infrared sensor controlled by remote |
| Master/Slave: | for synchronised operation of more units linked in a chain |

## MOVEMENT

| | |
|---|---|
| Tilt: | (up to) 20° with adjustable foot support |

## ELECTRONICS

| | |
|---|---|
| Dimmer: | linear 0 - 100% electronic dimmer |
| Dimmer curves: | 4 selectable dimming modes available |
| Strobe / shutter: | 1 - 25 Hz, electronic |
| Firmware upgrade with: | via DMX with UPBOXPRO/ UPBOX1 (not included) |

## BATTERY

| | |
|---|---|
| Battery: | 14.8V lithium |
| Battery life in colour change mode up to: | 12h |
| Battery life in full-mode up to: | 8h |
| Recharge connection: | power cable |
| Recharge time: | 5h (max) |
| Battery level indicator: | LED battery status indicator |

## CONNECTIONS

| | |
|---|---|
| Power connection: | IEC IN/OUT connectors |
| Signal connection: | XLR 3p IN/OUT connectors |
| Wireless Connection: | integrated WIBOX, WDBOX proprietary protocol |

## ELECTRICAL

| | |
|---|---|
| Mains power supply: | 100-240V - 50/60Hz |
| Max power consumption (230V): | 30W |
| Max power consumption (120V): | 31W |

Downloaded on 26/11/2026 - data may be provisional: features, specifications and appearance are subject to change without notice

## TECHNICAL SPECIFICATIONS

### PHYSICAL

| | |
|---|---|
| IP rating: | IP33 |
| Cooling: | fan-free with natural convection |
| Housing: | Sturdy die-cast aluminium body |
| Finish: | black or white finishing |
| Operating temperature: | Ta 0 to +40 °C (+32 to +104 °F) |
| Dimensions (WxHxD): | 138x184x145mm |
| Weight: | 3,4kg |

### INSTALLATION

| | |
|---|---|
| Mounting points: | M12 threaded mounting points |

### CERTIFICATIONS / REPORTS

| | |
|---|---|
| Compliance: | CE, UKCA, RCM |

### BOX CONTENT

1 x SMARTBAT

1 x 1,5 meters BARE END - IEC power cable

1 x LUMIPARIRCH

## ACCESSORIES & RELATED PRODUCTS



**LUMIPARIRCH**

RGBWA IR remote controller, manual / auto modes, for LUMIPAR IR series



**FCLSMARTBAT**

Flight case for 9 SMARTBAT, 613x480x507 mm, 22 kg



**SMARTCOVERMR**

Mirror housing for SMARTBAT projectors.



**SMARTBATCOVER**

Nylon rain-proof cover for SMARTBAT projector



**SMARTBATBAGI**

New nylon bag high resistance to contain 4 pcs SMARTBAT projectors.



**ARCLUMIL25D42**

Optic lens 25°, D.42mm



**ARCLUMIL45D42**

Optic lens 45°, D.42mm



**UPBOXPRO**

Firmware uploader kit, USB IN, 5-pin XLR DMX OUT connector

Downloaded on 26/11/2026 - data may be provisional: features, specifications and appearance are subject to change without notice

## TECHNICAL DRAWINGS

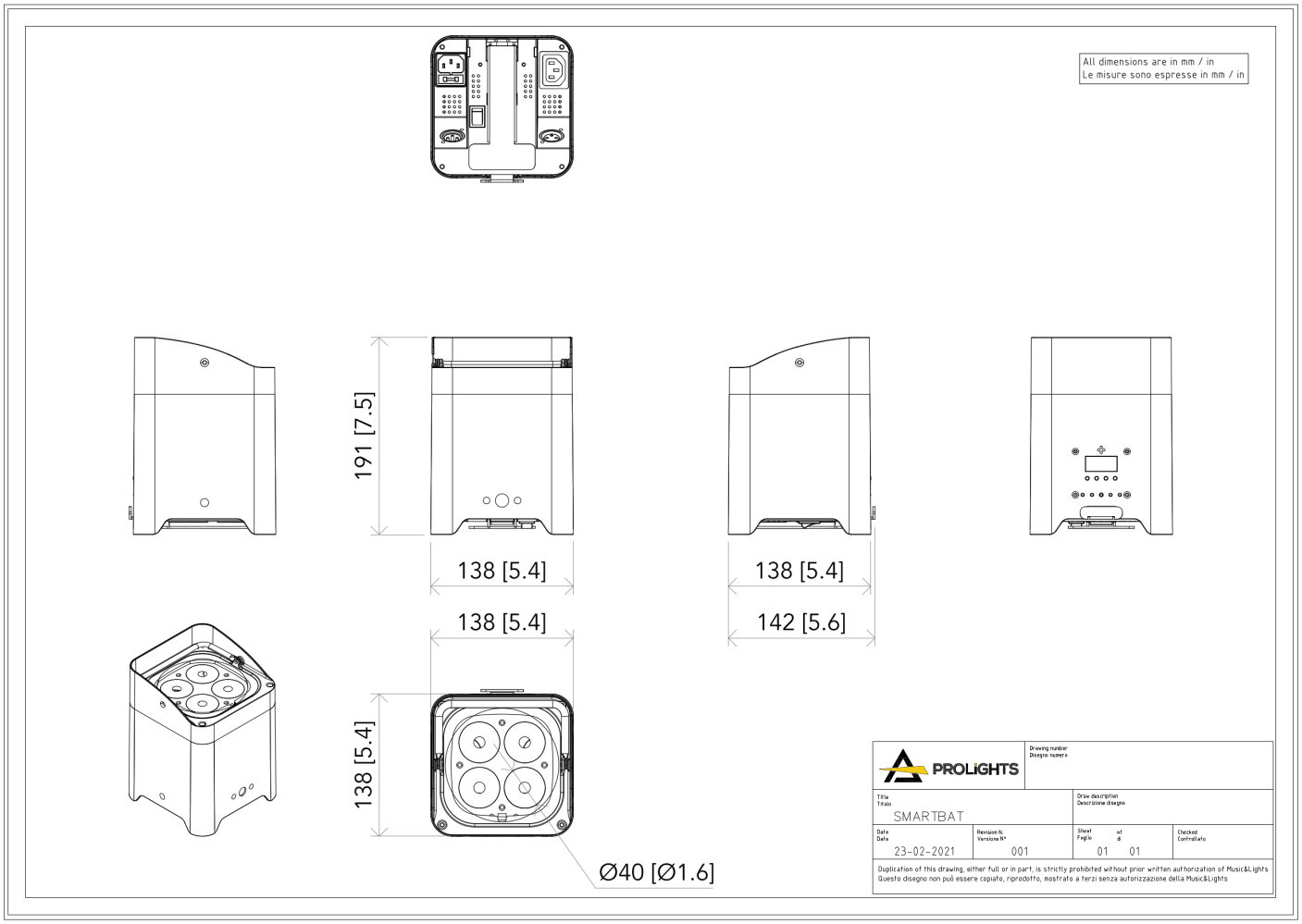

## PHOTOMETRICS

**Full On - Original Lens - 15deg**

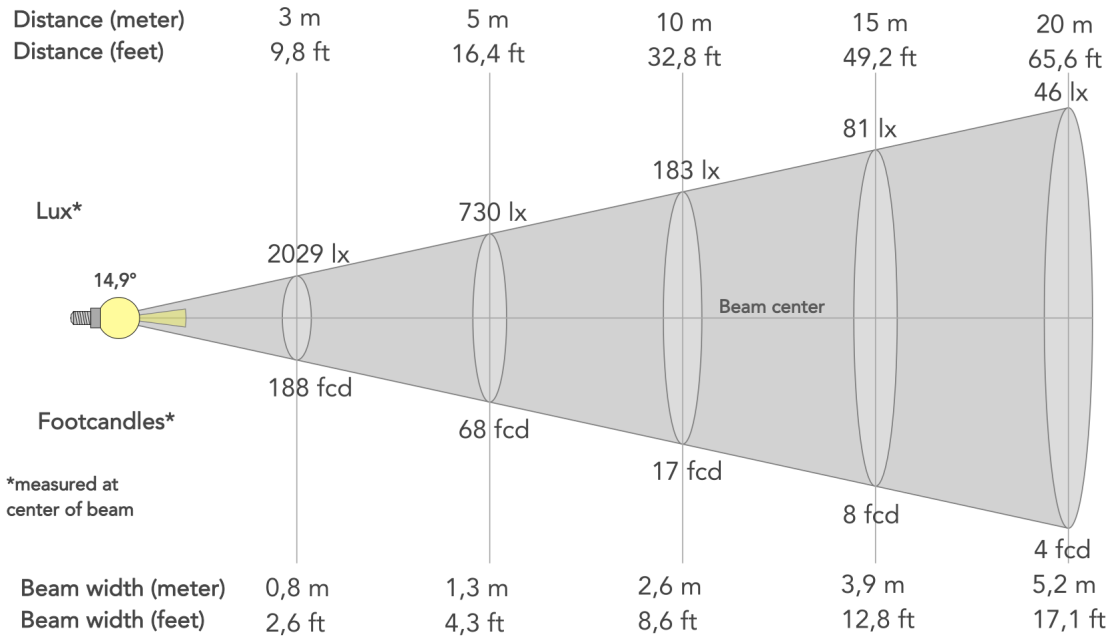


| | | |
|---|---|---|
| Beam angle (50%): **14.9°** | Field angle (10%): **25.2°** | Cut-off angle (2.5%): **34°** |