Smart BatPlusG2

ORDER CODE: SMARTBATPLUSG2



SOURCE
4x20W RGB + Warm White LED

IP RATING
IP65 for temporary outdoor use

WEIGHT
5,7kg / 12.57lbs

CRI
94 @3.200 K

Downloaded on 26/11/2026 - data may be provisional: features, specifications and appearance are subject to change without notice

TECHNICAL SPECIFICATIONS

LIGHT SOURCE

Source:	4x20W RGB + Warm White LED
Luminous flux:	2'051 @Full
Lux:	1'723lx @5 m without filter
CRI:	94 @3.200 K; 92 @5.600 K
R9:	96 @3.200 K; 96 @5.600 K
TLCI:	92 @5.600 K
TM30 Rf:	93 @3.200 K; 91 @5.600 K
TM30 Rg:	105 @3.200 K; 106 @5.600 K
Source life expectancy:	> 50.000 h

OPTICS

Beam angle:	10°
Additional optics:	filters to achieve 20°, 40°, 60°, 10°x60°

COLOUR SYSTEM

CCT:	CCT control through dedicated DMX channel
White presets:	2'800K - 10'000K
Colour wheel:	virtual colour wheel with macros
Macros:	built-in white presets

DYNAMIC EFFECTS

Control Resolution:	16-bit dimmer and color control
Static mode:	selection of static colour
Manual mode:	manual adjustment of colour
Auto mode:	built-in programs with execution speed adjustment

CONTROL

Supported Protocols:	DMX512, RDM, CRMX + WDMX
RDM:	for remote addressing and parameter configuration
Display:	Graphic User Interface
IR:	infrared sensor controlled by remote
Master/Slave:	for synchronised operation of more units linked in a chain

ELECTRONICS

Dimmer:	linear 0 - 100% electronic dimmer
Dimmer curves:	4 selectable dimming modes available
Strobe / shutter:	1 - 30 Hz, electronic
Selectable PWM:	600 to 25,000 Hz (selectable steps)
Firmware upgrade with:	via DMX with UPBOXPRO/ UPBOX1 (not included)

BATTERY

Battery:	removible 21,6V lithium
Estimated battery life:	up to 3 / 6 / 8 / 12 / 16 / 18 h (selectable)
Recharge connection:	Battery Pack fast-charge in Case
Recharge time:	4h (max)
Battery level indicator:	shown on display
Other:	Battery recharge in AC and DC, operation in main power with possibility to disable battery recharge throught software and charging operation in flightcase through the quick charger connector

CONNECTIONS

Power connection:	Seetronic powerCON TRUE IP65 IN/OUT
Signal connection:	IP65 Seetronic XLR 5p IN/OUT connectors
Wireless Connection:	integrated LumenRadio TiMo FX RDM - CRMX and W-DMX compatible

ELECTRICAL

Mains power supply:	100-240V - 50/60Hz
Max power consumption (230V):	(with mains) 80W
Power factor:	>0,98

Downloaded on 26/11/2026 - data may be provisional: features, specifications and appearance are subject to change without notice

TECHNICAL SPECIFICATIONS

PHYSICAL

IP rating:	IP65 for temporary outdoor use
Cooling:	fan-free with natural convection
Housing:	Sturdy die-cast aluminium body
Finish:	black (RAL 9004)
Operating temperature:	Ta 0 to +45 °C (+32 to +113 °F)
Dimensions (WxHxD):	192x188x192mm
Weight:	5,7kg

BOX CONTENT

1 x SMARTBATPLUSG2

1 x filter frame

1 x half top hat

1 x connector cover plate

1 x SBPG2BAT

1 x 1,5 meters power cable (BARE END - SEETRONIC IP65 power connector)

INSTALLATION

Suspension and fixing:	bracket for hanging and floor positioning
Other:	Quick release foot to achieve 20° adjustable tilt

CERTIFICATIONS / REPORTS

Compliance:	CE, UKCA, RCM, cTUVus, FCC

Downloaded on 26/11/2026 - data may be provisional: features, specifications and appearance are subject to change without notice

ACCESSORIES & RELATED PRODUCTS



SBPG2HSHANDLE
Half snoot with handle for SMARTBATPLUSG2



SBPG2BAT
Single battery for SMARTBATPLUSG2



SBPG2FYBK
Floor bracket for SMARTBATPLUSG2, black



SBPG2FYWH
Floor bracket for SMARTBATPLUSG2, white



SBPG2FYCR
Floor bracket for SMARTBATPLUSG2, chrome



SBPG2FYGL
Floor bracket for SMARTBATPLUSG2, gold



SBPG2HYBK
Hanging bracket for SMARTBATPLUSG2, black



SBPG2HYWH
Hanging bracket for SMARTBATPLUSG2, white



SBPG2HYCR
Hanging bracket for SMARTBATPLUSG2, chrome



SBPG2HYGL
Hanging bracket for SMARTBATPLUSG2, gold



SBPG2CKBK
Cover kit for SMARTBATPLUSG2, black



SBPG2CKWH
Cover kit for SMARTBATPLUSG2, white



SBPG2CKCR
Cover kit for SMARTBATPLUSG2, chrome



SBPG2CKGL
Cover kit for SMARTBATPLUSG2, gold

SBPG2FILTER20
Simmetric 20° light diffusion filter for SMARTBATPLUSG2 projector

SBPG2FILTER40
Simmetric 40° light diffusion filter for SMARTBATPLUSG2 projector

SBPG2FILTER60
Simmetric 60° light diffusion filter for SMARTBATPLUSG2 projector

SBPG2FILTER1060
Asymmetric 10°x60° (VxH) Light diffusion filter for SMARTBATPLUSG2 projector



FCLPLUSSBPG2
Flight case for 6 SMARTBATPLUSG2 with brackets on-board,battery charger included



FCLSMARTBATPG2
Flight case for 6 SMARTBATPLUSG2, battery charger included



SBPG2BCC
Battery compartment closing cap for SMARTBATPLUSG2



SBPG2POWER
Charger for 2 x SBPG2BAT battery for SMARTBATPLUSG2



PRL-IRC
RGBWA IR controller, 29 buttons, manual/static colours, auto programs, fade



AETHERBOXONE
IP65 1x universe CRMX transceiver, DMX, Ethernet protocols, Wi-Fi, Bluetooth, battery-ready, POE



IPTESTBOX
Portable vacuum and pressure tester for ProLights IP fixtures



UPBOXPRO
Firmware uploader kit, USB IN, 5-pin XLR DMX OUT connector

TECHNICAL DRAWINGS

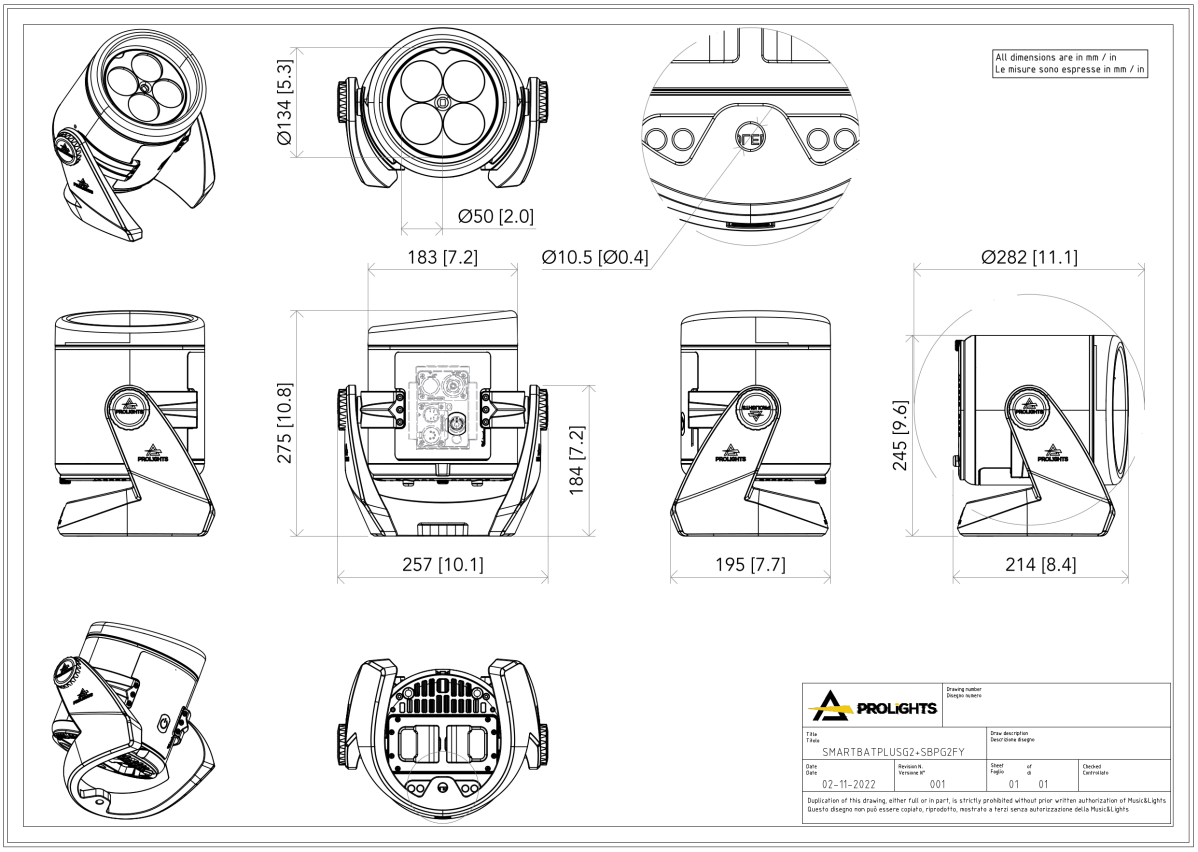

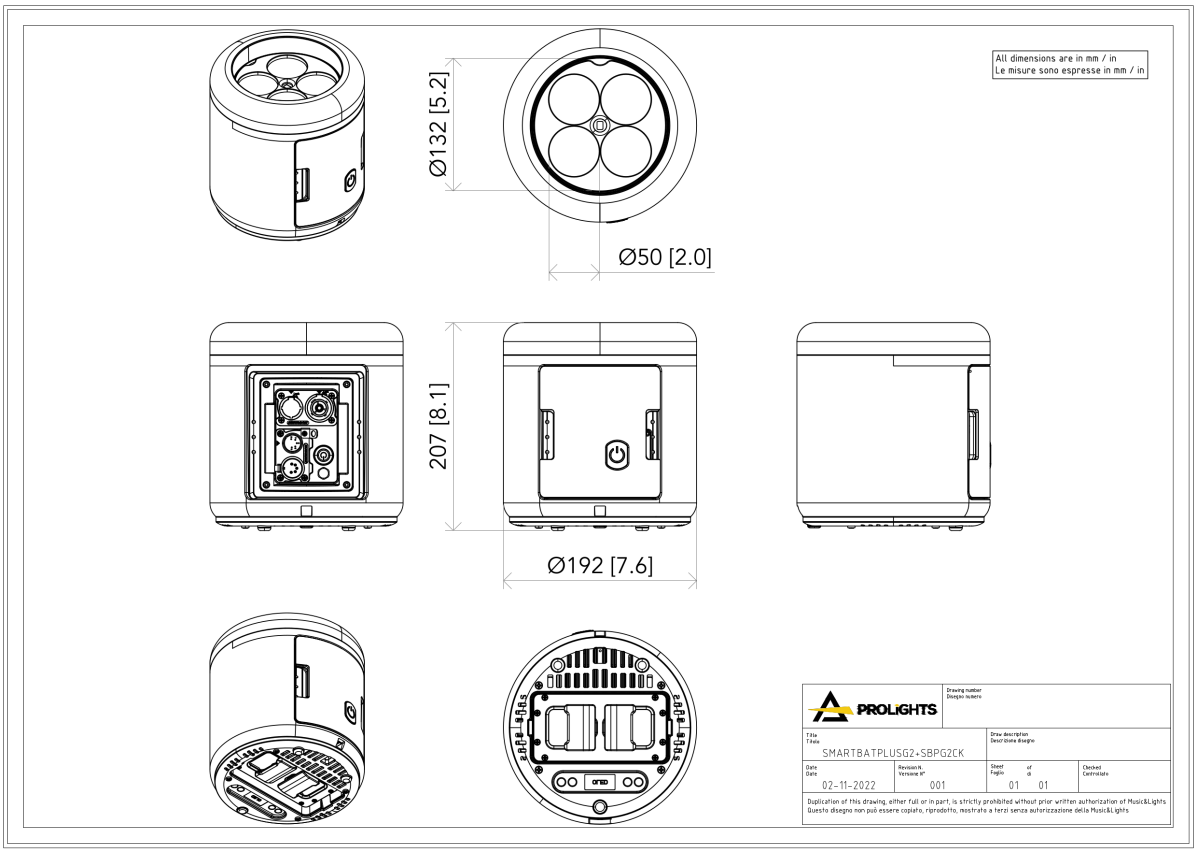

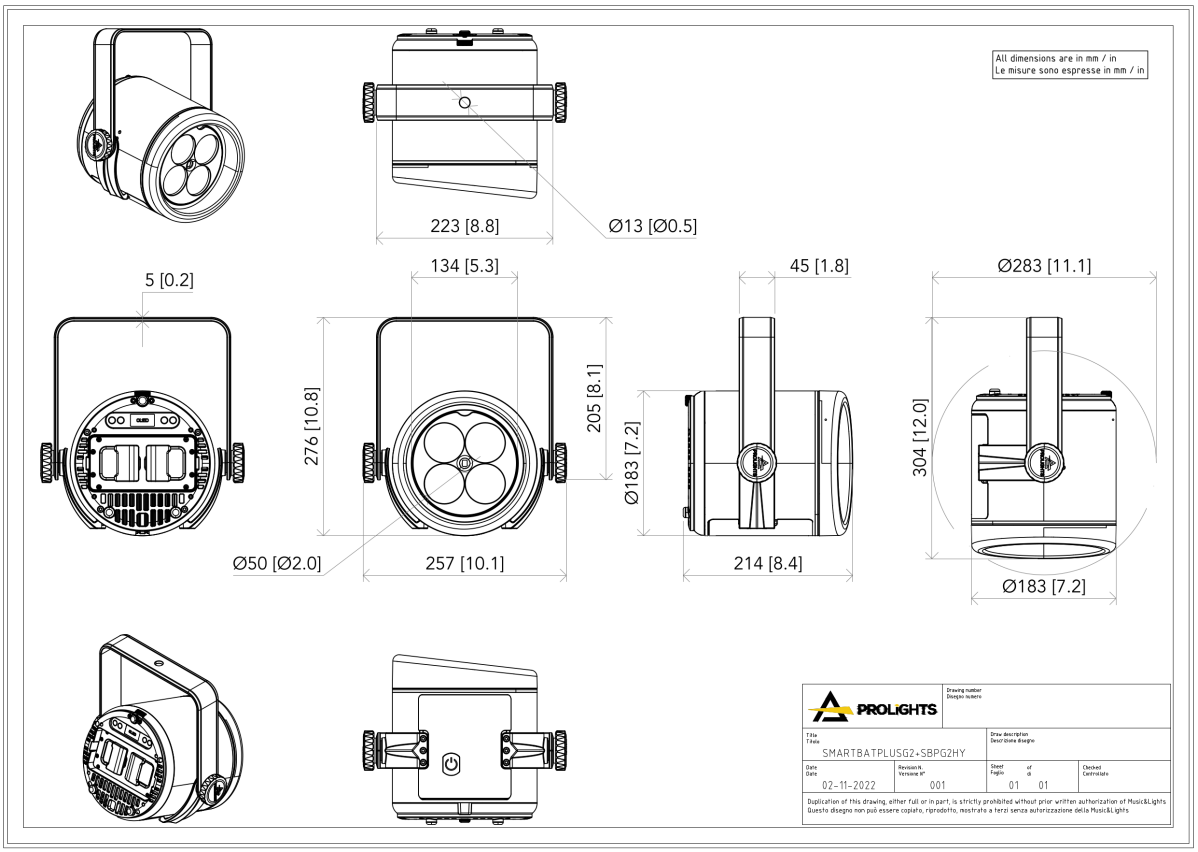
All dimensions are in mm / in
Le misure sono espresse in mm / in
223 [8.8]
Ø13 [Ø0.5]
5 [0.2]
134 [5.3]
45 [1.8]
Ø283 [11.1]
276 [10.8]
205 [8.1]
Ø183 [7.2]
304 [12.0]
Ø50 [Ø2.0]
257 [10.1]
214 [8.4]
Ø183 [7.2]
PROLIGHTS
SMARTBATPLUSG2+SBPG2HY
02-11-2022
001
01 01

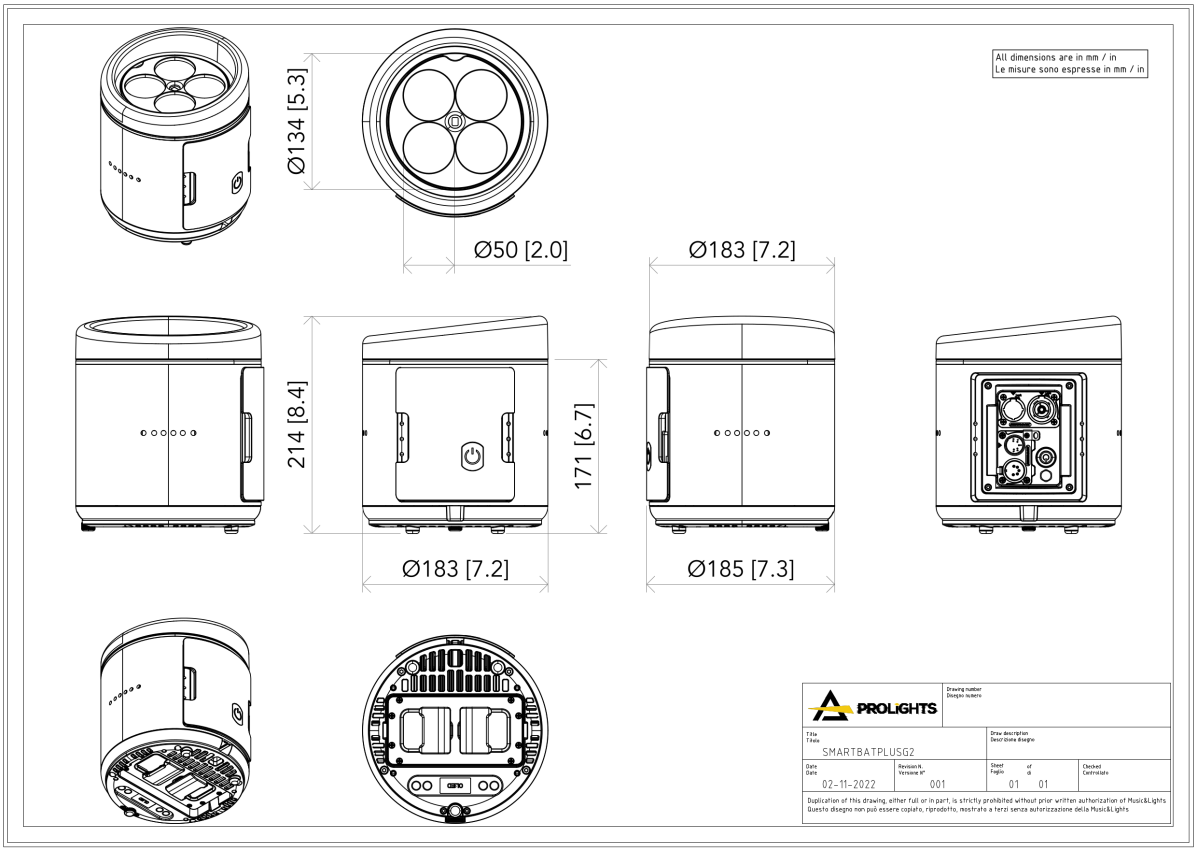
All dimensions are in mm / in
Le misure sono espresse in mm / in
Ø134 [5.3]
Ø50 [2.0]
Ø183 [7.2]
214 [8.4]
171 [6.7]
Ø183 [7.2]
Ø185 [7.3]
PROLIGHTS
SMARTBATPLUSG2
02-11-2022
001
01 01

PHOTOMETRICS

Full On Cal.Off. - Native Optic (Without Filter)

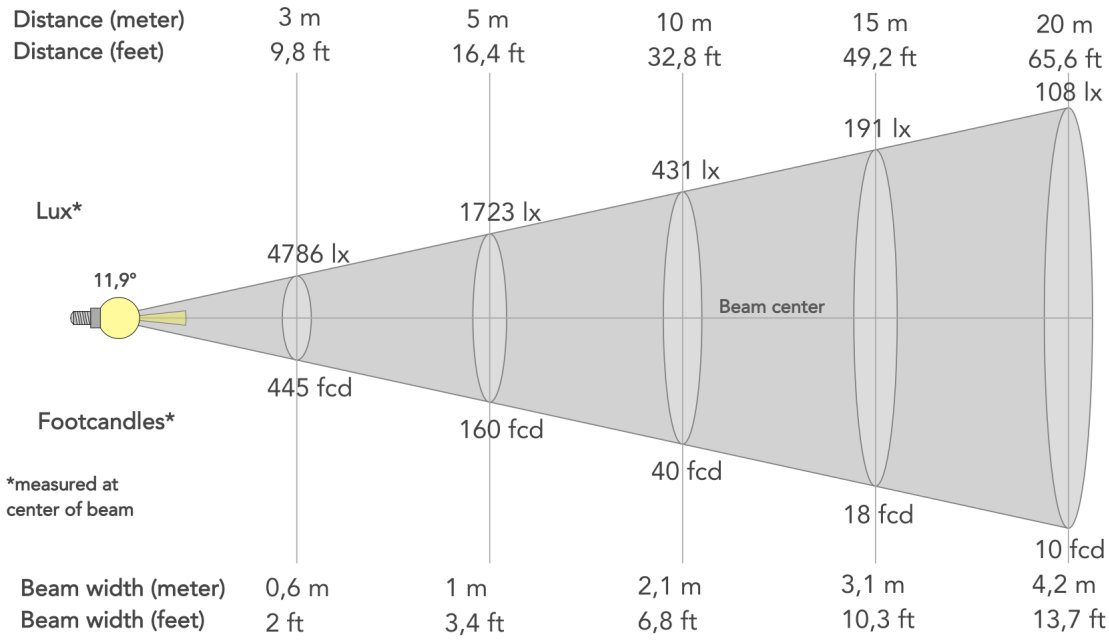

Beam angle (50%): **11.9°**	Field angle (10%): **21°**	Cut-off angle (2.5%): **26.8°**