Smart BatWash

ORDER CODE: SMARTBATWASH



SOURCE	IP RATING	WEIGHT
15x20W RGB + Warm White LED	**IP65 for temporary outdoor use**	**9,8kg / 21.61lbs**

LUMINOUS FLUX (MAX)	CRI
6'300 lm	**> 95 @3200K**

TECHNICAL SPECIFICATIONS

LIGHT SOURCE

Source:	15x20W RGB + Warm White LED
Luminous flux:	6'300 lm @full
Lux:	4'451lx @5 m full
CRI:	> 95 @3200K ; > 93 @5600K
R9:	> 98 @3200K ; > 93 @5600K
TLCI:	> 84 @5600K
TM30 Rf:	94.2 @3200K ; > 92 @5600K
TM30 Rg:	104.4 @3200K ; > 105 @5600K
Source life expectancy:	> 50.000 h

OPTICS

Beam angle:	10°

COLOUR SYSTEM

CCT:	CCT control through dedicated DMX channel
White presets:	2'800K - 10'000K
Colour wheel:	virtual colour wheel with macros
Macros:	built-in white presets

DYNAMIC EFFECTS

Control Resolution:	16-bit dimmer and color control
Static mode:	selection of static colour
Manual mode:	manual adjustment of colour
Auto mode:	built-in programs with execution speed adjustment

CONTROL

Supported Protocols:	DMX512, RDM, CRMX + WDMX
RDM:	for remote addressing and parameter configuration
Display:	Graphic User Interface
IR:	infrared sensor controlled by remote
Master/Slave:	for synchronised operation of more units linked in a chain

ELECTRONICS

Dimmer:	linear 0 - 100% electronic dimmer
Dimmer curves:	4 selectable dimming modes available
Strobe / shutter:	1 - 30 Hz, electronic
Selectable PWM:	600 to 25,000 Hz (selectable steps)
Firmware upgrade with:	via DMX with UPBOXPRO/ UPBOX1 (not included)

BATTERY

Battery:	28.8V lithium
Estimated battery life:	up to 3 / 6 / 8 / 12 / 16 / 18 h (selectable)
Recharge connection:	Directly from the mains power or magnetic fast-charge in case
Recharge time:	5h (max)
Battery level indicator:	shown on display
Other:	Battery recharge in AC and DC, operation in main power with possibility to disable battery recharge throught software and charging operation in flightcase

CONNECTIONS

Power connection:	magnetic DC connector for battery recharge and Seetronic powerCON TRUE IP65 IN/OUT connector
Signal connection:	IP65 Seetronic XLR 5p IN/OUT connectors
Wireless Connection:	integrated LumenRadio TiMo FX RDM - CRMX and W-DMX compatible

ELECTRICAL

Mains power supply:	100-240V - 50/60Hz
Max power consumption (230V):	180W
Output (at 230V):	11 units on a single power line
Output (at 120V):	5 units on a single power line
Power factor:	>0,94

Downloaded on 27/11/2026 - data may be provisional: features, specifications and appearance are subject to change without notice

TECHNICAL SPECIFICATIONS

PHYSICAL

IP rating:	IP65 for temporary outdoor use
Cooling:	fan-free with natural convection
Housing:	Sturdy die-cast aluminium body
Finish:	black (RAL 9004)
Operating temperature:	Ta 0 to +45 °C (+32 to +113 °F)
Dimensions (WxHxD):	381x344x143mm
Weight:	9,8kg

INSTALLATION

Suspension and fixing:	any position with quick-lock Omega brackets

CERTIFICATIONS / REPORTS

Compliance:	CE, RCM, FCC, cTUVus

BOX CONTENT

1 x SMARTBATWASH

1 x SBWFILTER25

1 x OS25PLUS

1 x 1,5 meters power cable (BARE END - SEETRONIC POWERCON TRUE1 IP65)

ACCESSORIES & RELATED PRODUCTS



OS25PLUS
Quick-lock omega bracket, M12 hole



SBWFILTER25
25° symmetric light diffusion filter for SMARTBATWASH



SBWFILTER1060
10x60° (VxH) asymmetric light diffusion filter for SMARTBATWASH



SBWPOWER
Single charger for SMARTBATWASH



AETHERBOXONE
IP65 1x universe CRMX transceiver, DMX, Ethernet protocols, Wi-Fi, Bluetooth, battery-ready, POE



UPBOXPRO
Firmware uploader kit, USB IN, 5-pin XLR DMX OUT connector



FCLSMARTBATWASH
Flight case for 4 SMARTBATPLUSWASH, internal AC battery charging



SBWFILTER40
40° symmetric light diffusion filter for SMARTBATWASH



SBWBD
Black&White& White barn door 4 directional flaps to adjust the light beam, comp. SMARTBATWASH



PRL-IRC
RGBWA IR controller, 29 buttons, manual/static colours, auto programs, fade



IPTESTBOX
Portable vacuum and pressure tester for ProLights IP fixtures

TECHNICAL DRAWINGS

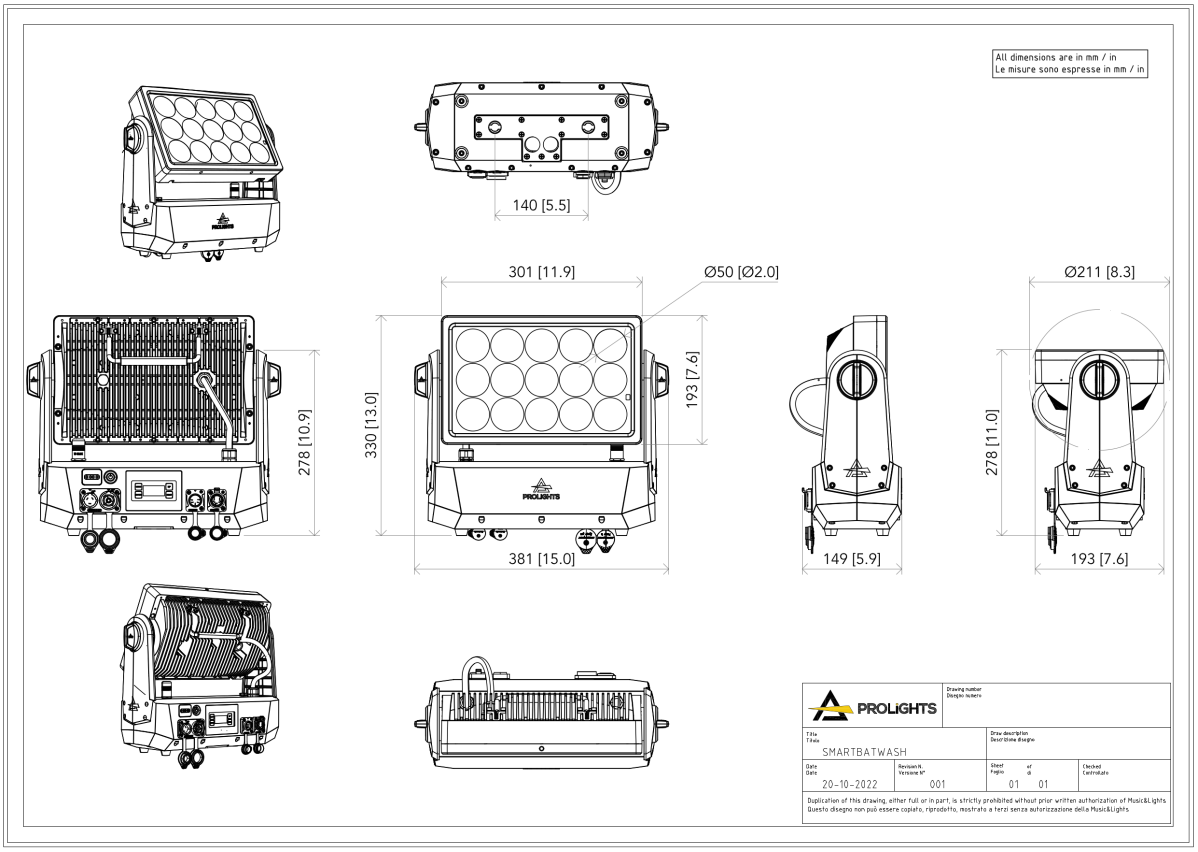

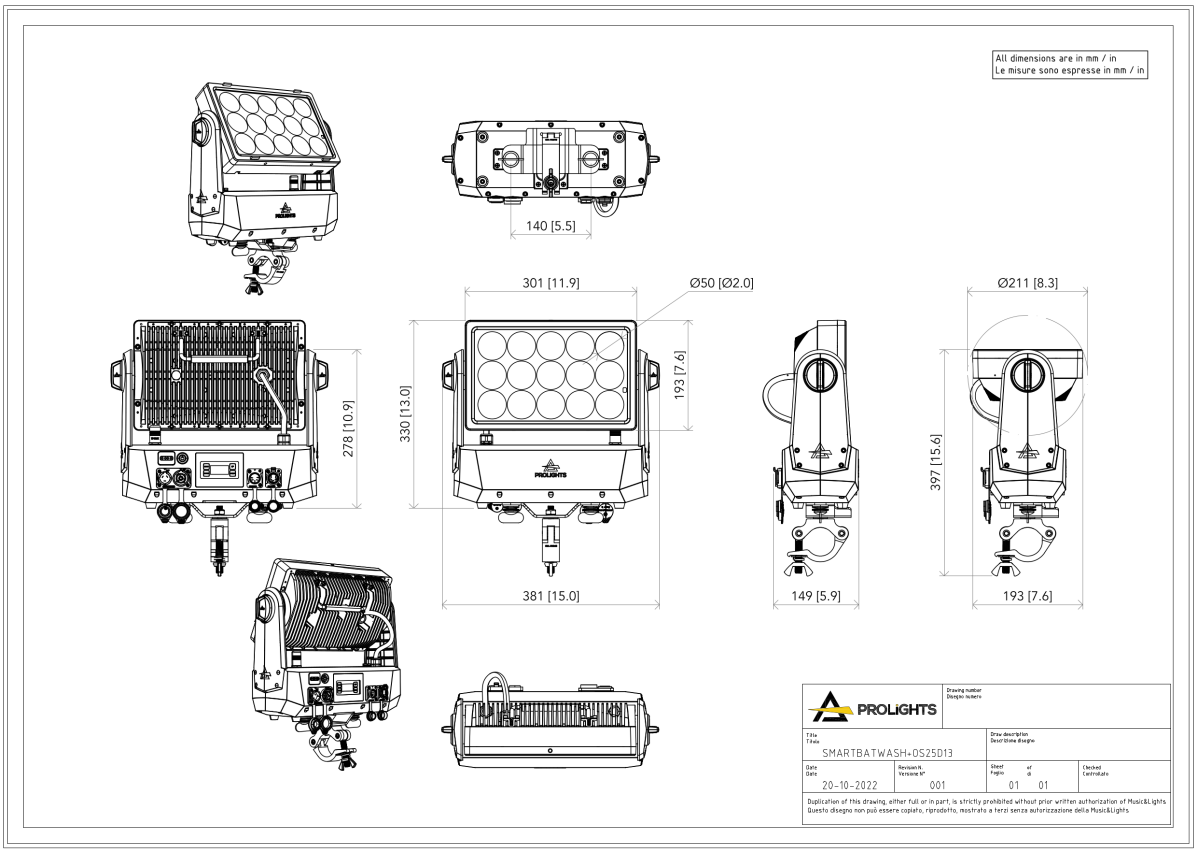

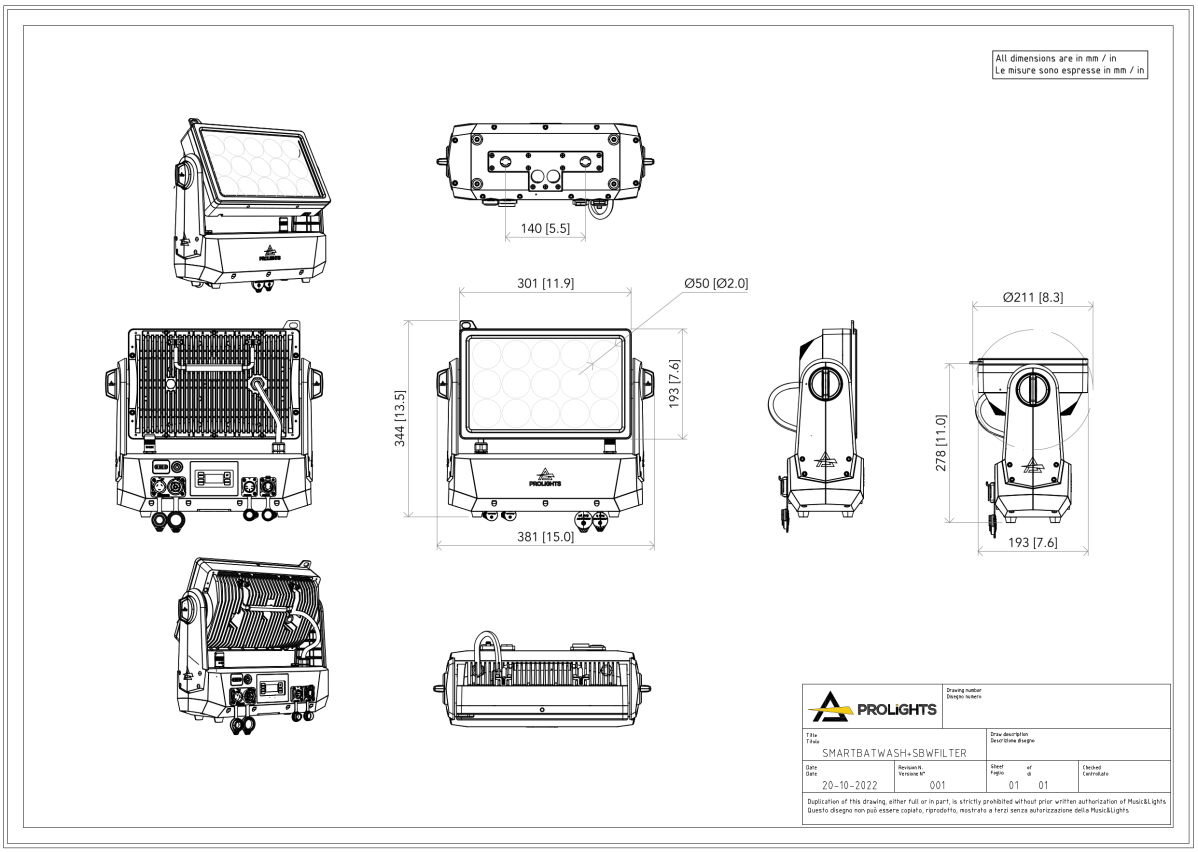
All dimensions are in mm / in
Le misure sono espresse in mm / in
140 [5.5]
301 [11.9]
Ø50 [Ø2.0]
344 [13.5]
193 [7.6]
381 [15.0]
Ø211 [8.3]
278 [11.0]
193 [7.6]
PROLIGHTS
SMARTBATWASH+SBWFILTER
20-10-2022
001
01 01

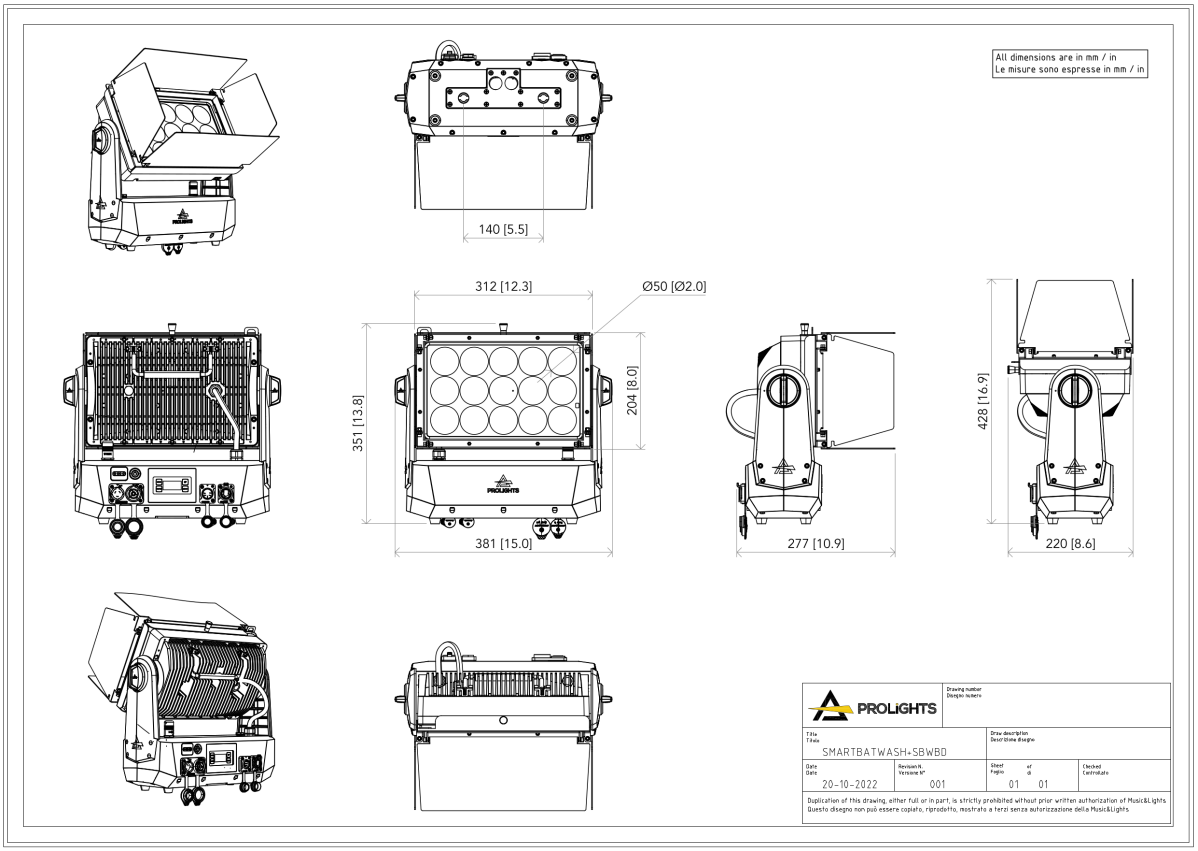
All dimensions are in mm / in
Le misure sono espresse in mm / in
140 [5.5]
312 [12.3]
Ø50 [Ø2.0]
351 [13.8]
204 [8.0]
381 [15.0]
277 [10.9]
428 [16.9]
220 [8.6]
PROLIGHTS
SMARTBATWASH+SBWBD
20-10-2022
001
01 01

PHOTOMETRICS

Full On - Native Optic (No Filter)

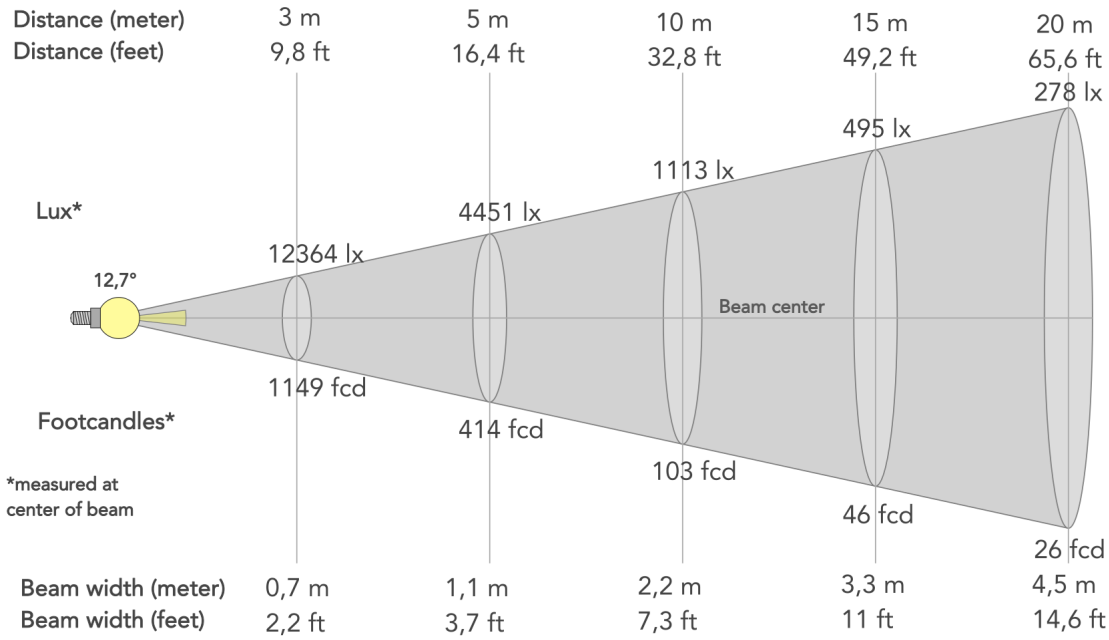

Beam angle (50%): **12.7°**	Field angle (10%): **22.9°**	Cut-off angle (2.5%): **29.8°**