Stark 400

ORDER CODE: **STARK400**



SOURCE	ZOOM RANGE	IP RATING
7x40W RGBW Osram Ostar LEDs	**4° - 36° motorised linear zoom**	**IP20**

WEIGHT	LUMINOUS FLUX (MAX)
11kg / 24.25lbs	**1'944 lm**

Downloaded on 29/11/2026 - data may be provisional: features, specifications and appearance are subject to change without notice

TECHNICAL SPECIFICATIONS

LIGHT SOURCE

Source:	7x40W RGBW Osram Ostar LEDs
Source CCT:	2.000 K - 10.000K
Luminous flux:	(4°) 1'944 lm - (36°) 2'700 @Full
Lux:	(4°) 15'584 lm - (36°) 848lx @5 m full
Source life expectancy:	> 50.000 h

OPTICS

Zoom range:	4° - 36° motorised linear zoom
Lens type:	high-quality glass lens optics

COLOUR SYSTEM

CCT:	CCT control through dedicated DMX channel
White presets:	2.000 K ~ 10.000K
Colour wheel:	virtual colour wheel with macros

DYNAMIC EFFECTS

Pixel patterns:	pre-programmed static and dynamic pixel patterns
FX generator:	adjustable foreground/background colour, index, speed, direction

CONTROL

Supported Protocols:	DMX512, RDM, Art-Net, W-DMX
DMX channels:	16 / 26 / 27 / 32 / 50ch
Pixel control:	pixel2pixel control
RDM:	for remote addressing and parameter configuration
Display:	LCD high resolution colour display with autoflip
Hibernation:	power safe mode when lost DMX
Master/Slave:	for synchronised operation of more units linked in a chain

MOVEMENT

Pan:	540° / 630° - 16-bit resolution
Tilt:	233° - 16-bit resolution
Position feedback:	automatic repositioning after external movement

ELECTRICAL

Mains power supply:	100-240V - 50/60Hz
Max power consumption (230V):	245W

ELECTRONICS

Dimmer:	linear 0 - 100% electronic dimmer
Dimmer curves:	selectable dimming modes available
Strobe / shutter:	1 - 30 Hz, electronic
Display battery:	included, self-charging battery backup
Firmware upgrade with:	via DMX with UPBOXPRO/ UPBOX2 (not included)

CONNECTIONS

Power connection:	Neutrik powerCON TRUE1 IN/OUT connectors
Signal connection:	Amphenol XLR 5p IN/OUT connectors
Wireless Connection:	integrated W-DMX receiver
Data connection:	Art-Net RJ45 IN/OUT

Downloaded on 29/11/2026 - data may be provisional: features, specifications and appearance are subject to change without notice

TECHNICAL SPECIFICATIONS

PHYSICAL

IP rating:	IP20
Cooling:	heat pipe with low-noise fan
Housing:	Aluminium structure with high-resistance polycarbonate cover
Finish:	black
Operating temperature:	Ta -10 to +45 °C (+14 to +113 °F)
Dimensions (WxHxD):	338x452x239mm
Weight:	11kg

INSTALLATION

Suspension and fixing:	any position with quick-lock Omega brackets

CERTIFICATIONS / REPORTS

Compliance:	CE, UKCA, RCM, cTUVus, FCC

BOX CONTENT

1 x STARK400

1 x 1,5 meters power cable (BARE END - NEUTRIK POWERCON TRUE1 IP65)

2 x OS24PLUS

ACCESSORIES & RELATED PRODUCTS



OS24PLUS
Quick-lock omega bracket, M12 hole



AETHERBOXONE
IP65 1x universe CRMX transceiver, DMX, Ethernet protocols, Wi-Fi, Bluetooth, battery-ready, POE



UPBOXPRO
Firmware uploader kit, USB IN, 5-pin XLR DMX OUT connector

Downloaded on 29/11/2026 - data may be provisional: features, specifications and appearance are subject to change without notice

TECHNICAL DRAWINGS

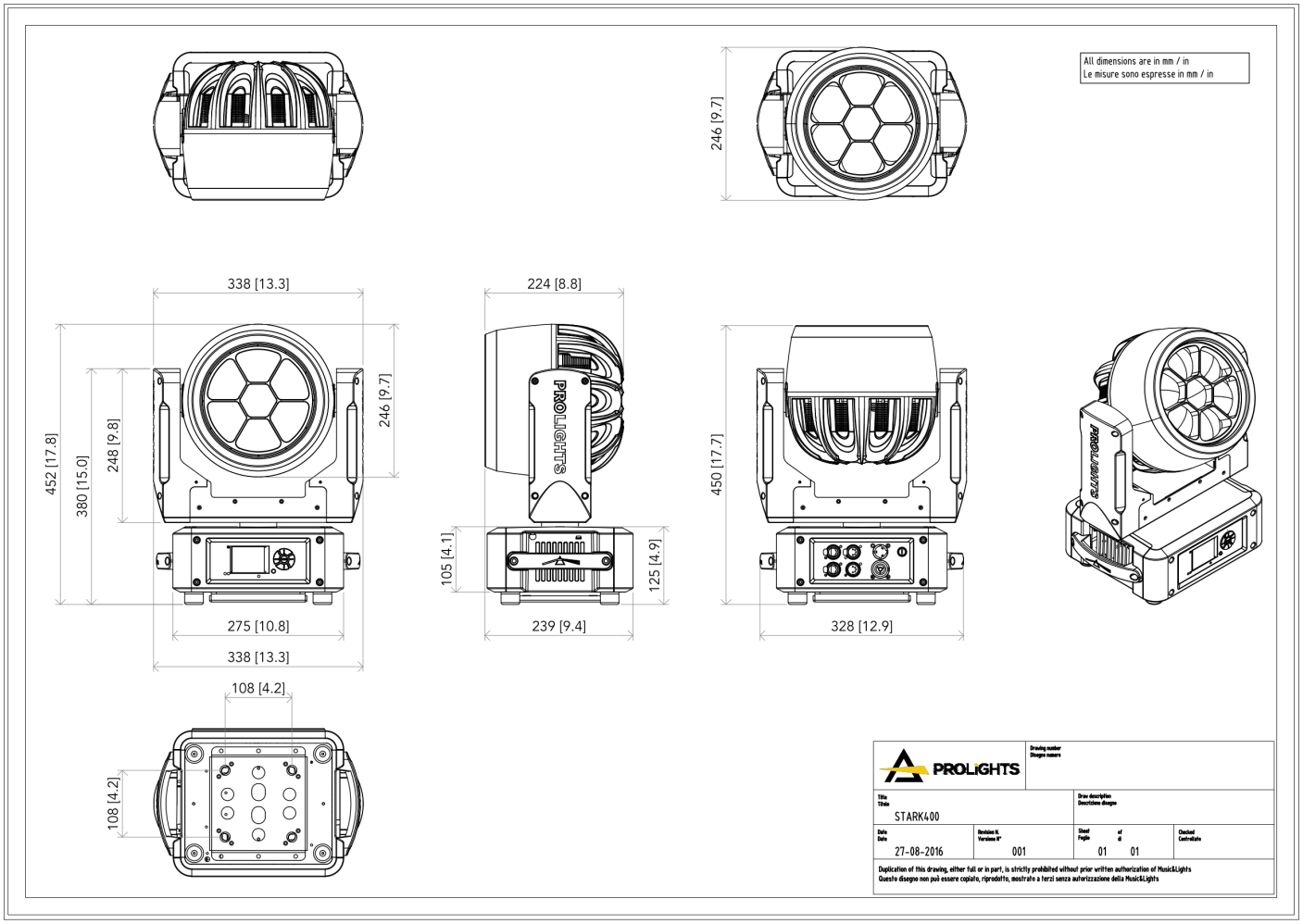

PHOTOMETRICS

full on - Min Zoom

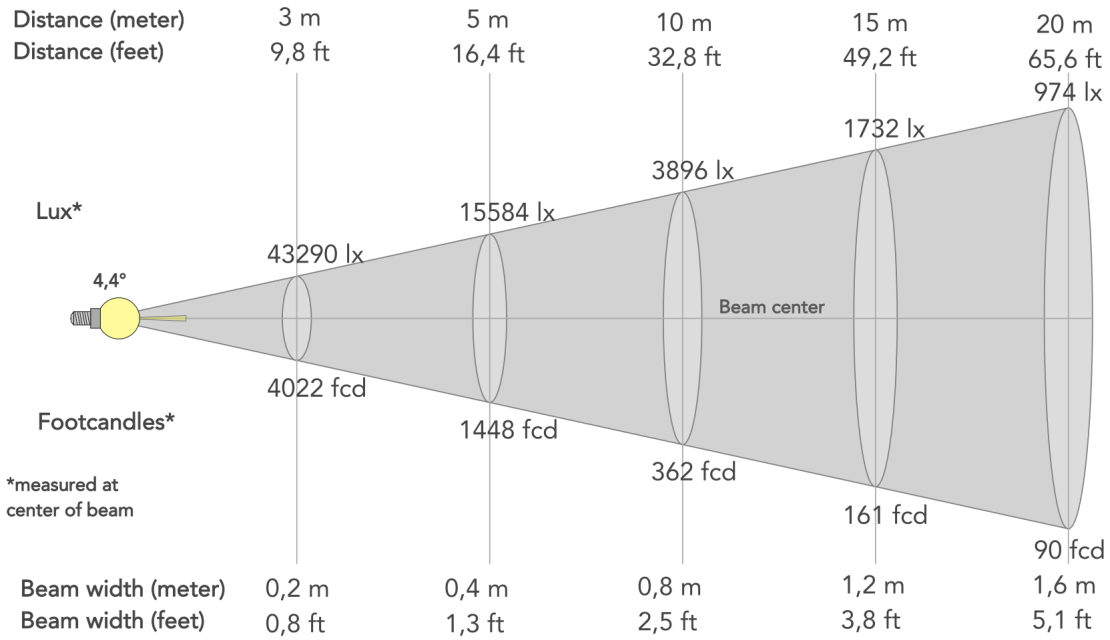

Beam angle (50%): **4.4°**	Field angle (10%): **5.6°**	Cut-off angle (2.5%): **6.1°**

Full on - Max Zoom

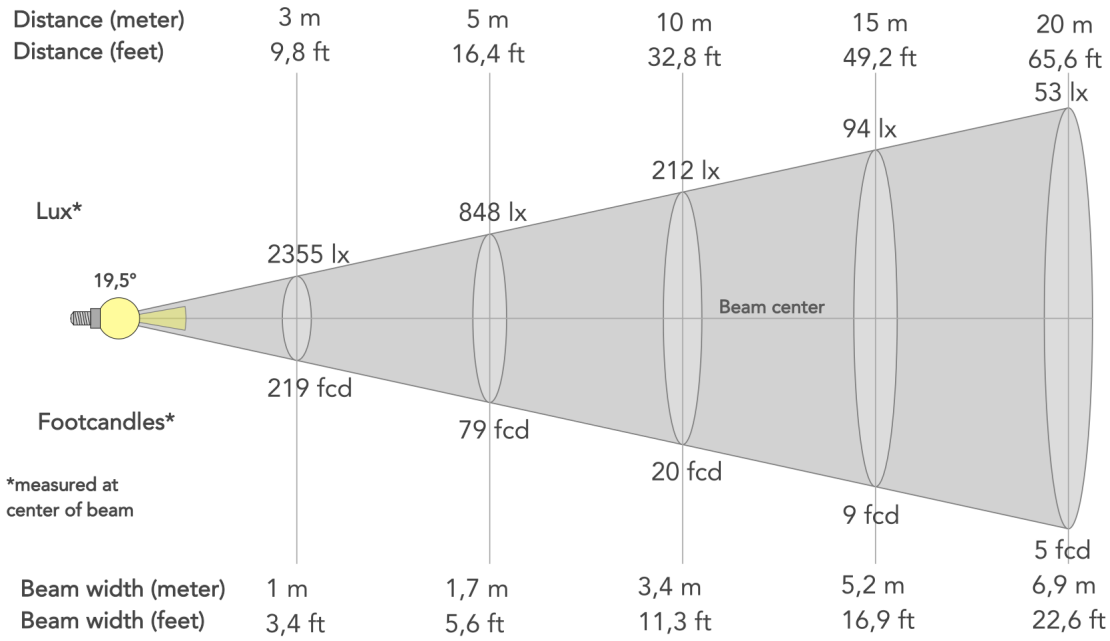

Beam angle (50%): **19.5°**	Field angle (10%): **36°**	Cut-off angle (2.5%): **42.3°**