Stark 400CC

ORDER CODE: **STARK400CC**



SOURCE
7x40W RGBW LED

ZOOM RANGE
3° - 45° motorised linear zoom

IP RATING
IP20

WEIGHT
11,3kg / 24.91lbs

Downloaded on 23/11/2026 - data may be provisional: features, specifications and appearance are subject to change without notice

TECHNICAL SPECIFICATIONS

LIGHT SOURCE

Source:	7x40W RGBW LED
Luminous flux:	11'660
Lux:	(4°) 37'250lx @3 m full
Lux:	(4°) 13'910lx @5 m full
Source life expectancy:	> 50.000 h

OPTICS

Zoom range:	3° - 45° motorised linear zoom
Lens type:	high-quality glass lens optics

COLOUR SYSTEM

CCT:	CCT control through dedicated DMX channel
White presets:	2.000 K ~ 10.000K
Colour wheel:	virtual colour wheel with macros

CONTROL

Supported Protocols:	DMX512, RDM
RDM:	for remote addressing and parameter configuration
Display:	LCD high resolution colour display with autoflip
Hibernation:	power safe mode when lost DMX
Master/Slave:	for synchronised operation of more units linked in a chain

MOVEMENT

Pan:	540° / 630° - 16-bit resolution
Tilt:	265° - 16-bit resolution
Position feedback:	automatic repositioning after external movement

ELECTRONICS

Dimmer:	linear 0 - 100% electronic dimmer
Strobe / shutter:	1 - 25 Hz, electronic
Display battery:	included, self-charging battery backup
Firmware upgrade with:	via menu with internal memory or via USB - DMX interface (UPBOXPRO/UPBOX2) not included

CONNECTIONS

Power connection:	Neutrik powerCON TRUE1 IN connector
Signal connection:	Amphenol XLR 3p IN/OUT connectors
Wireless Connection:	optional W-DMX receiver

ELECTRICAL

Mains power supply:	100-240V - 50/60Hz
Max power consumption (230V):	265W

PHYSICAL

IP rating:	IP20
Cooling:	heat pipe with low-noise fan
Housing:	Aluminium structure with high-resistance polycarbonate cover
Finish:	black
Operating temperature:	Ta -10 to +45 °C (+14 to +113 °F)
Dimensions (WxHxD):	328x449x235mm
Weight:	11,3kg

INSTALLATION

Suspension and fixing:	any position with quick-lock Omega brackets

Downloaded on 23/11/2026 - data may be provisional: features, specifications and appearance are subject to change without notice

ACCESSORIES & RELATED PRODUCTS



OS24PLUS

Quick-lock omega bracket, M12 hole

TECHNICAL DRAWINGS

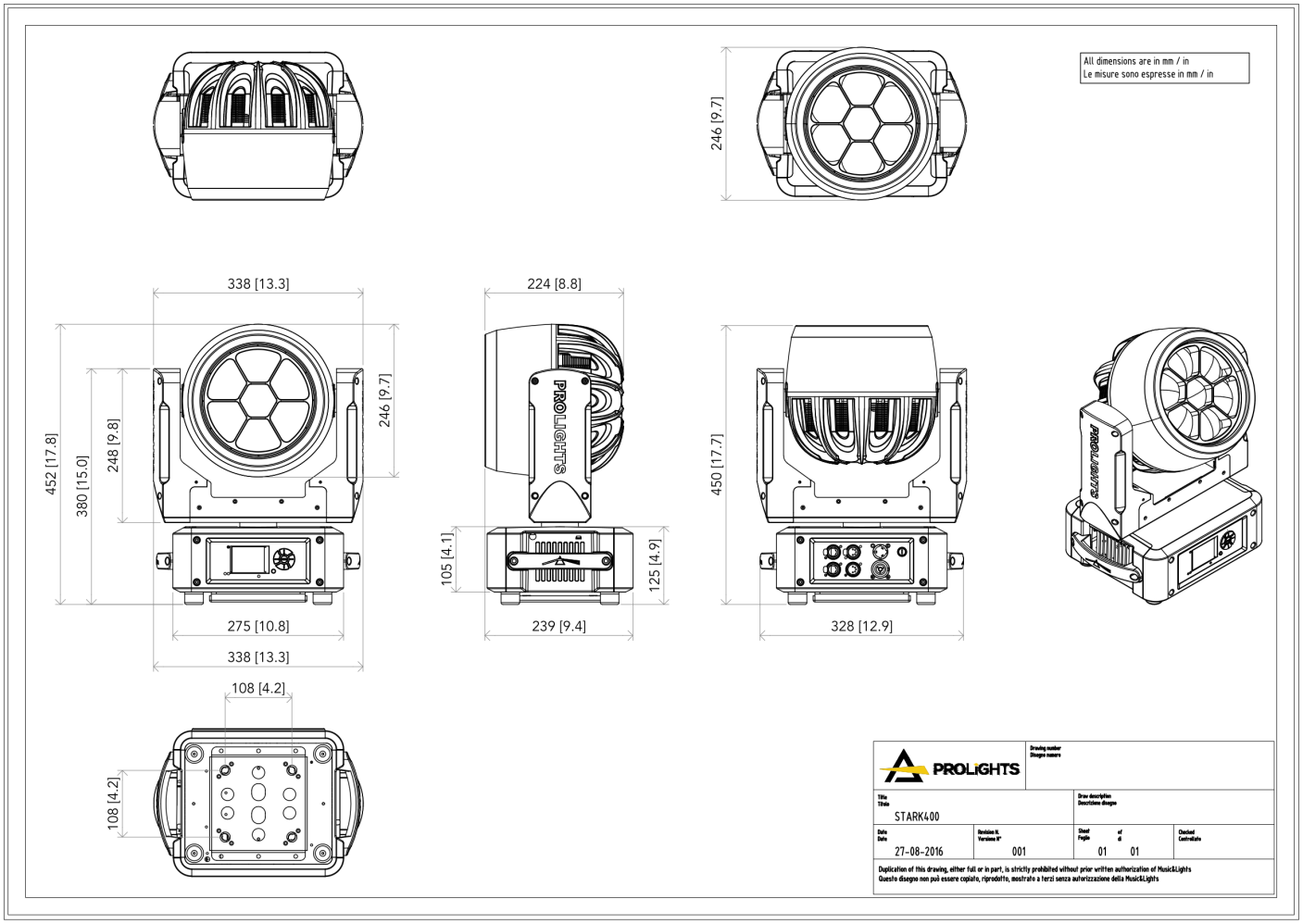

PHOTOMETRICS

full on - Min Zoom

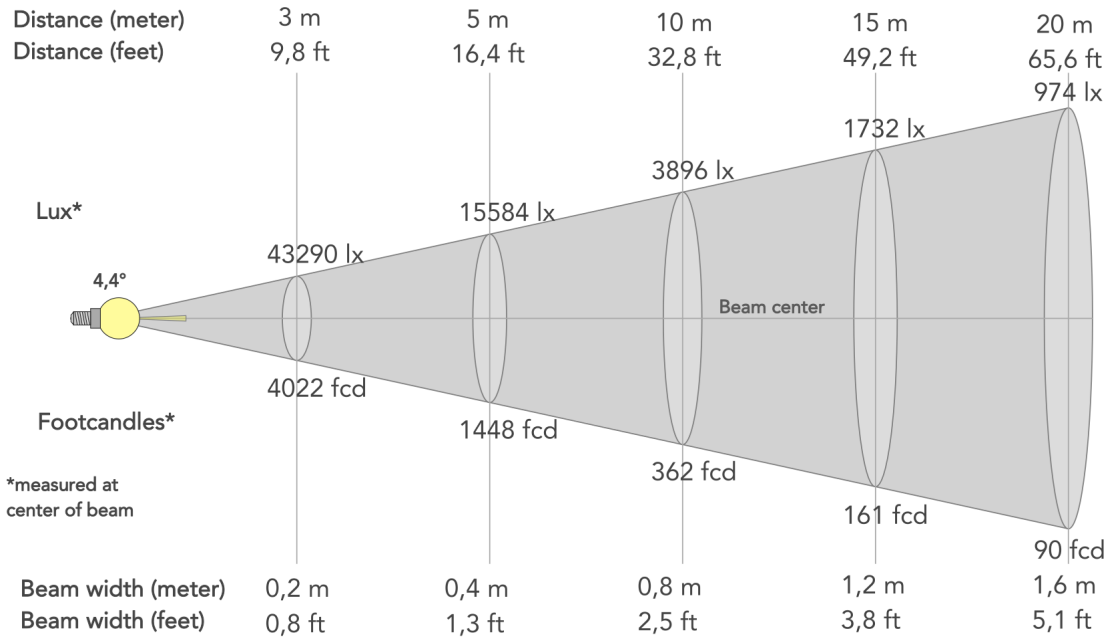

Beam angle (50%): **4.4°**	Field angle (10%): **5.6°**	Cut-off angle (2.5%): **6.1°**

Full on - Max Zoom

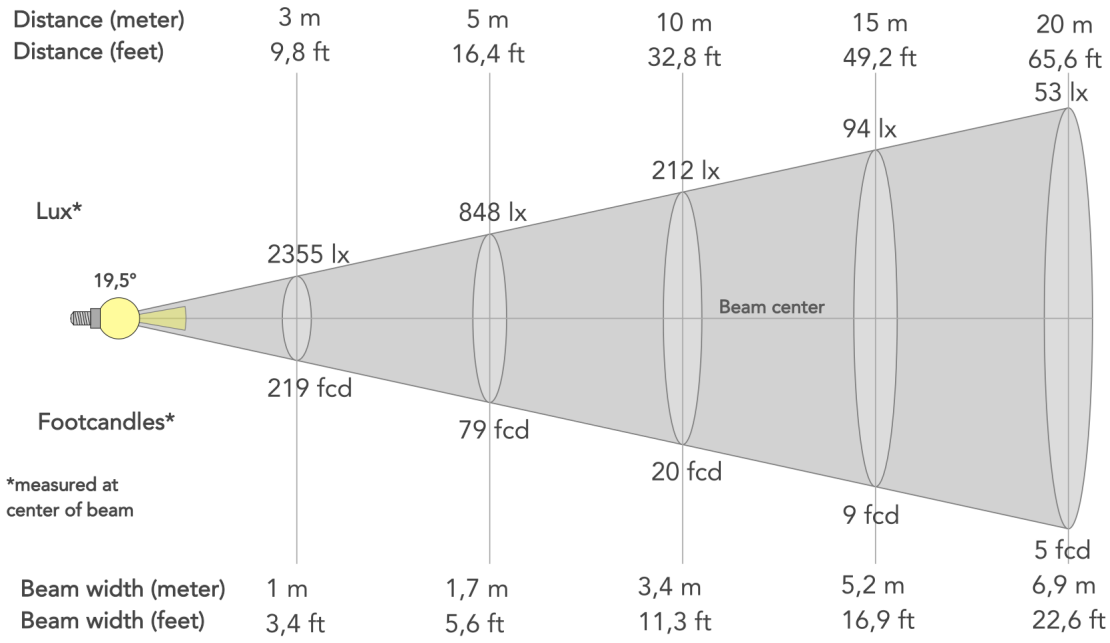

Beam angle (50%): **19.5°**	Field angle (10%): **36°**	Cut-off angle (2.5%): **42.3°**

MUSIC & LIGHTS S.r.l. | Via A. Olivetti, snc
04026 - Minturno (LT) ITALY | info@prolights.it
Tel: +39 0771 72190 | **prolights.it**
VAT No. IT 02057590594

Downloaded on 23/11/2026 - data may be provisional: features, specifications and appearance are subject to change without notice