StudioCob FC

ORDER CODE: STUDIOCOBFCBK



VERSIONS

	Code	Housing
	**STUDIOCOBFCBK**	**Black**
	STUDIOCOBFCCR	Chrome
	STUDIOCOBFCWH	White

SOURCE	IP RATING	WEIGHT
150W RGB COB LED	**IP20**	**4,5kg / 9.92lbs**

Downloaded on 26/11/2026 - data may be provisional: features, specifications and appearance are subject to change without notice

TECHNICAL SPECIFICATIONS

LIGHT SOURCE

Source:	150W RGB COB LED
Luminous flux:	3'682
Lux:	(60°) 428lx @3 m full
Lux:	(30°) 908lx @3 m full
Source life expectancy:	> 30.000 hrs (L80B10 @Ta 25° C / 77° F)

OPTICS

Beam angle:	60°
Field angle:	80°
Lens type:	parabolic reflector in combination with HD fresnel lens
Additional optics:	30° (inc) - 15° (opt)

COLOUR SYSTEM

Colour wheel:	virtual colour wheel with macros
Macros:	several pre-built macros with adjustable speed

DYNAMIC EFFECTS

Static mode:	selection of static colour
Manual mode:	manual adjustment of colour
Auto mode:	built-in programs with execution speed adjustment

CONTROL

Supported Protocols:	DMX512
DMX channels:	3 / 5 / 8ch
Display:	Graphic User Interface
Master/Slave:	for synchronised operation of more units linked in a chain

ELECTRONICS

Dimmer:	linear 0 - 100% electronic dimmer
Dimmer curves:	4 selectable dimming modes available
Strobe / shutter:	1 - 28 Hz, electronic
Selectable PWM:	600 to 25,000 Hz (selectable steps)
Firmware upgrade with:	via DMX with UPBOXPRO/ UPBOX1 (not included)

CONNECTIONS

Power connection:	Neutrik powerCON IN/OUT connectors
Signal connection:	XLR 3p + 5p IN/OUT connectors

ELECTRICAL

Mains power supply:	100-240V - 50/60Hz
Max power consumption (230V):	145W
Output (at 230V):	30 units on a single power line
Max power consumption (120V):	145W
Power factor:	0,96

PHYSICAL

IP rating:	IP20
Cooling:	forced-air with low-noise fan
Housing:	Sturdy die-cast aluminium body
Finish:	see available finishing
Operating temperature:	Ta -10 to +45 °C (+14 to +113 °F)
Dimensions (WxHxD):	262x190x371mm
Weight:	4,5kg

INSTALLATION

Suspension and fixing:	double bracket for hanging and floor positioning

CERTIFICATIONS / REPORTS

Compliance:	CE, UKCA, RCM

Downloaded on 26/11/2026 - data may be provisional: features, specifications and appearance are subject to change without notice

TECHNICAL SPECIFICATIONS

BOX CONTENT

1 x STUDIOCOBFC

1 x 1,5 meters 3G1,5mmq power cable (BARE END - NEUTRIK POWERCON power connector)

ACCESSORIES & RELATED PRODUCTS



STUDIOCOBL30
Optics for STUDIOCOB projectors series, 30°



STUDIOCOBL15
Optics for STUDIOCOB projectors series, 15°



STUDIOCOBBD
Barn door 4 directional flaps to adjust the light beam, f. frame included



FCLPAR4190
Flight case for 8 STUDIOCOB, VERSAPAR



UPBOXPRO
Firmware uploader kit, USB IN, 5-pin XLR DMX OUT connector

Downloaded on 26/11/2026 - data may be provisional: features, specifications and appearance are subject to change without notice

TECHNICAL DRAWINGS

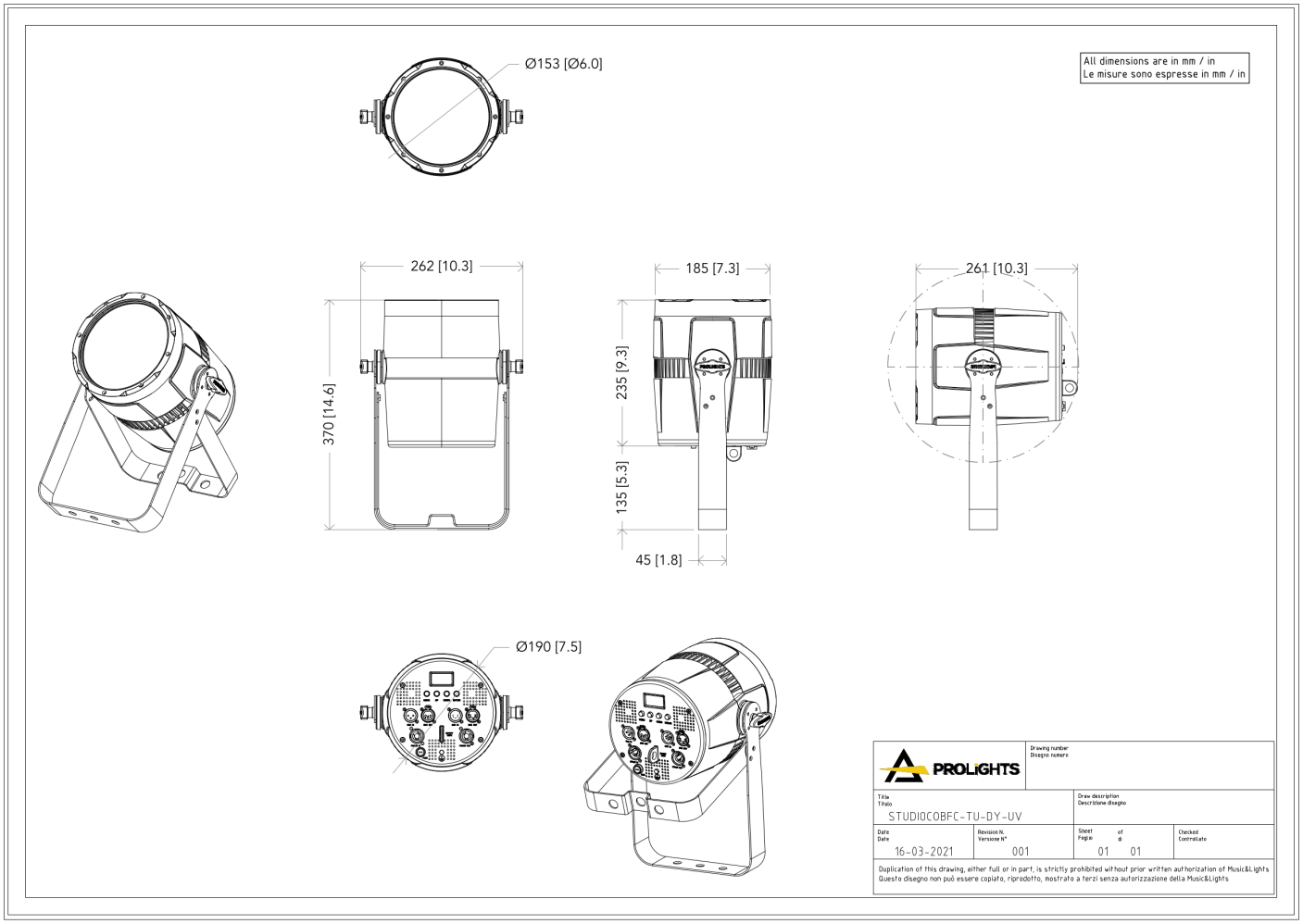

Downloaded on 26/11/2026 - data may be provisional: features, specifications and appearance are subject to change without notice