StudioCob PlusFC2

ORDER CODE: **STUDIOCOBPFC2BK**



VERSIONS

	Code	Finishing	On-board lens
	**STUDIOCOBPFC2BK**	**Black**	**18°**
	STUDIOCOBPFC2WH	White	18°

SOURCE
150W RGBW COB LED

IP RATING
IP65 for temporary outdoor use

WEIGHT
5,6kg / 12.35lbs

Downloaded on 29/11/2026 - data may be provisional: features, specifications and appearance are subject to change without notice

TECHNICAL SPECIFICATIONS

LIGHT SOURCE

Source:	150W RGBW COB LED
Source CCT:	white LED 5'700K
Luminous flux:	(18°) 3'632
Lux:	(18°) 2'958lx @3 m full
Source life expectancy:	> 50.000 h

OPTICS

Beam angle:	(on-board) 18° - (inc) 38° - (opt) 60°
Field angle:	(on-board) 36° - (inc) 63°
Lens type:	parabolic reflector in combination with HD fresnel lens
Additional optics:	38° (inc)

COLOUR SYSTEM

CCT:	CCT control through dedicated DMX channel
Colour wheel:	virtual colour wheel with macros

DYNAMIC EFFECTS

Static mode:	selection of static colour
Manual mode:	manual adjustment of colour
Auto mode:	built-in programs with execution speed adjustment

CONTROL

Supported Protocols:	DMX512, RDM
DMX channels:	4 / 6 / 10ch
RDM:	for remote addressing and parameter configuration
Display:	black OLED touch display
Master/Slave:	for synchronised operation of more units linked in a chain

ELECTRONICS

Dimmer:	linear 0 - 100% electronic dimmer
Dimmer curves:	4 selectable dimming modes available
Strobe / shutter:	1 - 28 Hz, electronic
Display battery:	included, self-charging battery backup
Selectable PWM:	600 to 25,000 Hz (selectable steps)
Firmware upgrade with:	via DMX with UPBOXPRO/ UPBOX1 (not included)

CONNECTIONS

Power connection:	Seetronic powerCON waterproof IN/OUT connectors
Signal connection:	Seetronic XLR 5p IN/OUT connectors

ELECTRICAL

Mains power supply:	100-240V - 50/60Hz
Max power consumption (230V):	140W
Output (at 230V):	22 units on a single power line
Max power consumption (120V):	145W
Power factor:	0,96

PHYSICAL

IP rating:	IP65 for temporary outdoor use
Cooling:	forced-air with low-noise fan
Housing:	Sturdy die-cast aluminium body
Finish:	black or white finishing
Operating temperature:	Ta -20 to +45 °C (-4 to +113 °F)
Dimensions (WxHxD):	259x187x370mm
Weight:	5,6kg

INSTALLATION

Suspension and fixing:	double bracket for hanging and floor positioning

CERTIFICATIONS / REPORTS

Compliance:	CE, UKCA, RCM, cTUVus, FCC

Downloaded on 29/11/2026 - data may be provisional: features, specifications and appearance are subject to change without notice

TECHNICAL SPECIFICATIONS

BOX CONTENT

1 x STUDIOCOBPLUSFC

1 x 1,5 meters 3G1,5mmq power cable (BARE END - SEETRONIC POWERCON TRUE1 IP65 power connector)

ACCESSORIES & RELATED PRODUCTS



STUDIOCOBPLUSL60
Optics for STUDIOCOBLUS projectors series, 60°



STUDIOCOBBD
Barn door 4 directional flaps to adjust the light beam, f. frame included



UPBOXPRO
Firmware uploader kit, USB IN, 5-pin XLR DMX OUT connector

TECHNICAL DRAWINGS

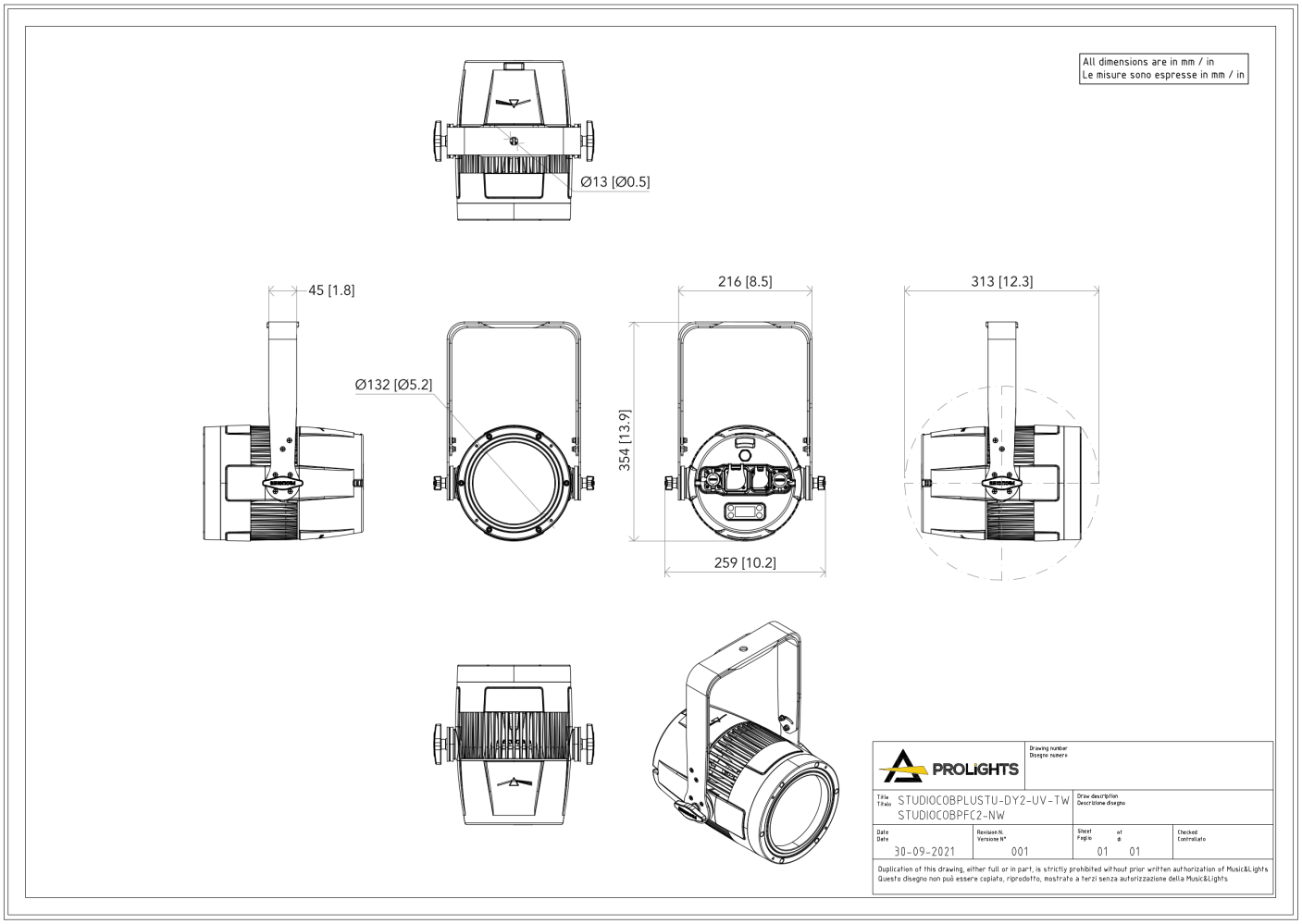

PHOTOMETRICS

Full On - Narrow

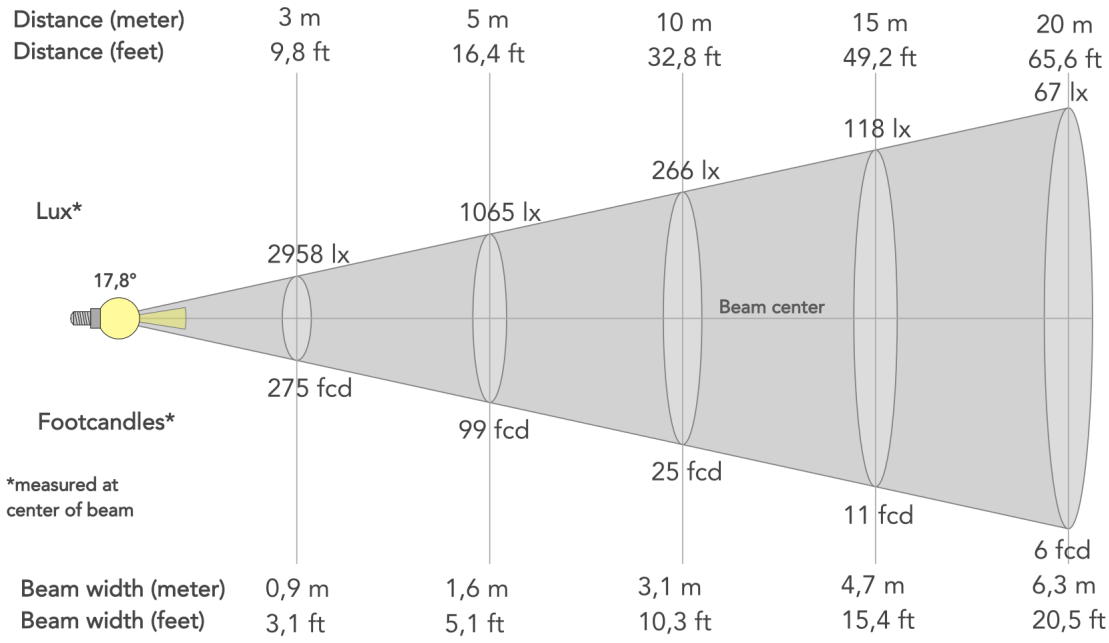

Beam angle (50%): **17.8°**	Field angle (10%): **33°**	Cut-off angle (2.5%): **45.1°**