SunRise 2FLXFC

ORDER CODE: SUNRISE2FLXFC



SOURCE	IP RATING	WEIGHT
2 x 300W RGB + Warm White + Amber LED	**IP65 for temporary outdoor use**	**9,9kg / 21.83lbs**

LUMINOUS FLUX (MAX)	CRI
32'920 lm	**92,8@ 3200K**

TECHNICAL SPECIFICATIONS

LIGHT SOURCE

Source:	2 x 300W RGB + Warm White + Amber LED
Luminous flux:	(60°) 32'920 lm @Full
Lux:	(60°) 1'520lx @5 m full
CRI:	92,8@ 3200K; 93 @ 5600K
R9:	96,9 @ 3200K; 86 @ 5600K
Source life expectancy:	> 50.000 hrs (L70B10 @Ta 25° C / 77° F)

COLOUR SYSTEM

Spektra OS:	unmatched color precision and consistency
CCT:	CCT control, + / - green correction, tungsten emulation
Tungsten Emulation:	dimming with warm color shift simulation
White presets:	2.700 K ~ 10.000K

MOVEMENT

Pan:	+/- 20° with manual directional adjustment for each pod

CONNECTIONS

Power connection:	Seetronic powerCON TRUE IP65 IN/OUT
Signal connection:	IP65 Seetronic XLR 5p IN/OUT connectors
Wireless Connection:	optional LumenRadio TiMo FX RDM - CRMX and W-DMX compatible
Data connection:	IP65 Seetronic Art-Net RJ45 IN/OUT
EtherFlow:	Ethernet pass-through switch that preserves network connectivity even when the fixture is unpowered

OPTICS

Beam angle:	53°
Field angle:	92°

DYNAMIC EFFECTS

Static mode:	selection of static dimmer, colors and color temperature
Manual mode:	manual adjustment of colour

CONTROL

Supported Protocols:	DMX512, RDM, ArtNet, sACN (IGMP v2), CRMX (optional)
DMX channels:	1 to 35ch modular and user-customizable DMX architecture (MCA)
Pixel control:	pixel2pixel control
RDM:	for remote addressing and parameter configuration
Display:	Graphic User Interface

ELECTRONICS

Dimmer:	linear 0 - 100% electronic dimmer
Dimmer curves:	6 selectable dimming modes available
Strobe / shutter:	1 - 30 Hz, electronic
Selectable PWM:	1,000 to 25,000 Hz (selectable steps)
Firmware upgrade with:	via DMX with UPBOXPRO (not included) or via Ethernet with DMX-Workshop

ELECTRICAL

Mains power supply:	100-240V - 50/60Hz
Max power consumption (230V):	630W
Output (at 230V):	3 units on a single power line
Standby power:	4,3 W
Power factor:	> 0,94

CERTIFICATIONS / REPORTS

Compliance:	CE, RCM, FCC, cTUVus

Downloaded on 26/11/2026 - data may be provisional: features, specifications and appearance are subject to change without notice

TECHNICAL SPECIFICATIONS

PHYSICAL

IP rating:	IP65 for temporary outdoor use
Cooling:	forced-air with low-noise fan
Housing:	Weatherproof IP65 construction with die-cast magnesium alloy
Finish:	black
Operating temperature:	Ta -20 to +45 °C (-4 to +113 °F)
Dimensions (WxHxD):	542x173x192mm
Weight:	9,9kg

INSTALLATION

Suspension and fixing:	- hanging bracket for floor stand. Also can fit the fast quick lock OMEGA bracket
Bracket system:	Several brackets available for simply array mounting - see available accessories
Hardware on-board:	fast anchor points on the front for accessory mounting and on board mechanics for modular assembly of multiple fixtures

BOX CONTENT

1 x SUNRISE2FLXFC

1 x SBLFLXB01H

1 x OS25PLUS

1 x 1,5 meters 3G1,5mmq power cable (BARE END - SEETRONIC POWERCON TRUE1 IP65 power connector)

Downloaded on 26/11/2026 - data may be provisional: features, specifications and appearance are subject to change without notice

ACCESSORIES & RELATED PRODUCTS



FCLSUNFLX
Flight case per 6 pcs SUNRISE2FLX/ SUNBLASTFLX (with and without bracket)



HDWK
Wireless kit, compatible with multiple Prolights products



OS25PLUS
Quick-lock omega bracket, M12 hole



OS25H3PLUS
Quick-lock omega bracket, 6 cm height, M12 hole



ECLFRSPG
Spigot for PROLIGHTS fixtures



SRFLXSPC
Spacer for SUN FLX series projectors



SBLFLXB01H
Horizontal mounting bracket for 1 SUNBLASTFLX



SBLFLXB01V
Vertical mounting bracket for 1 SUNBLASTFLX



SBLFLXB02H
Horizontal mounting bracket for 2 SUNBLASTFLX



SBLFLXB02V
Vertical mounting bracket for 2 SUNBLASTFLX



SBLFLXHB005V
Vertical suspension bracket for SUNBLASTFLX



SBLFLXHB01H
Horizontal suspension bracket for SUNBLASTFLX



SBLFLXFLR
Floor bracket for SUNBLASTFLX



SBLFLXADPFLR
Adapter plate for stacked floor mounting for SUNBLASTFLX



SBLFLXHHFLRB
Adjustable bracket for hanging or floor mounting of SUNBLASTFLX



UPBOXPRO
Firmware uploader kit, USB IN, 5-pin XLR DMX OUT connector

TECHNICAL DRAWINGS

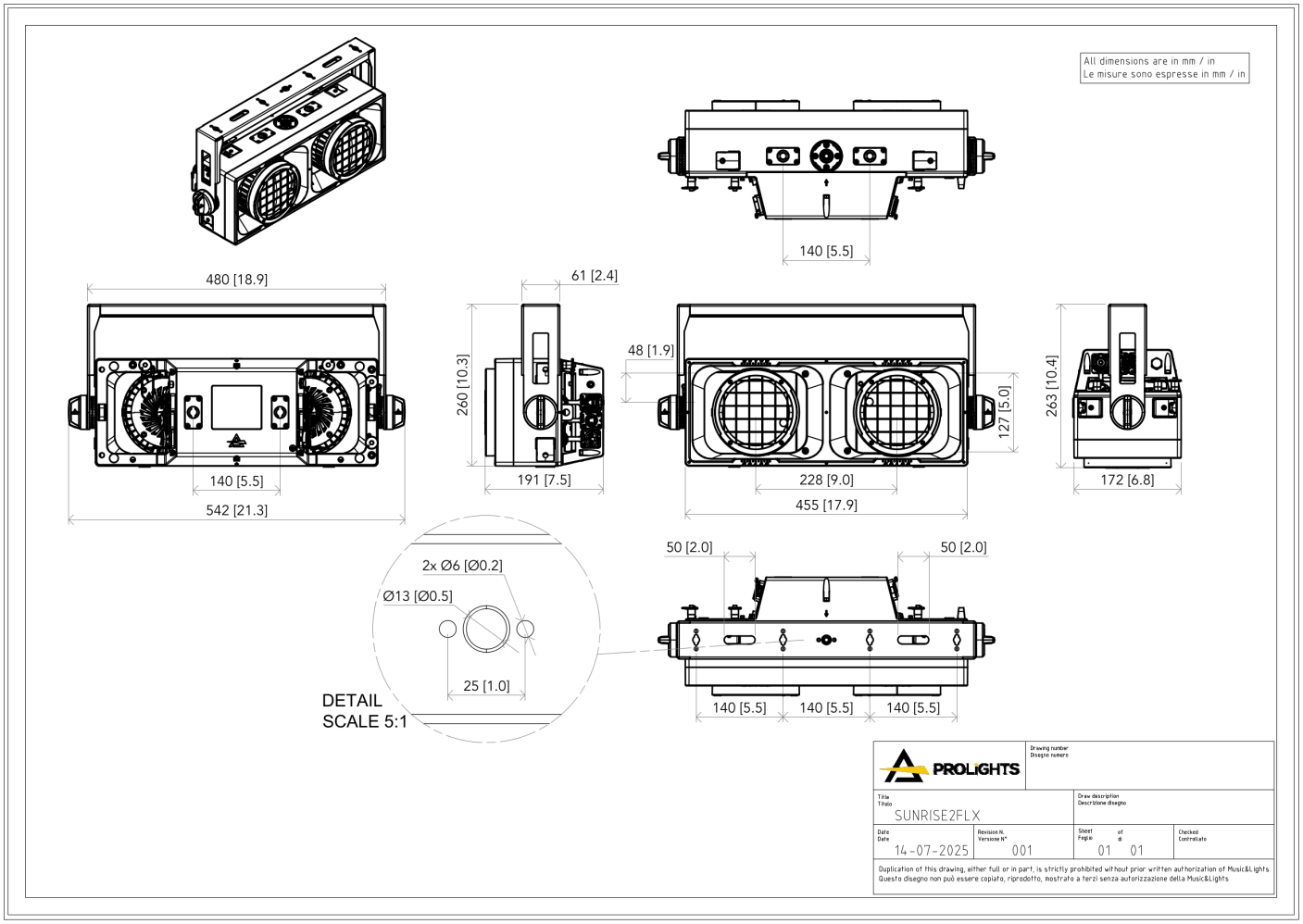

PHOTOMETRICS

Full On - Original Optic

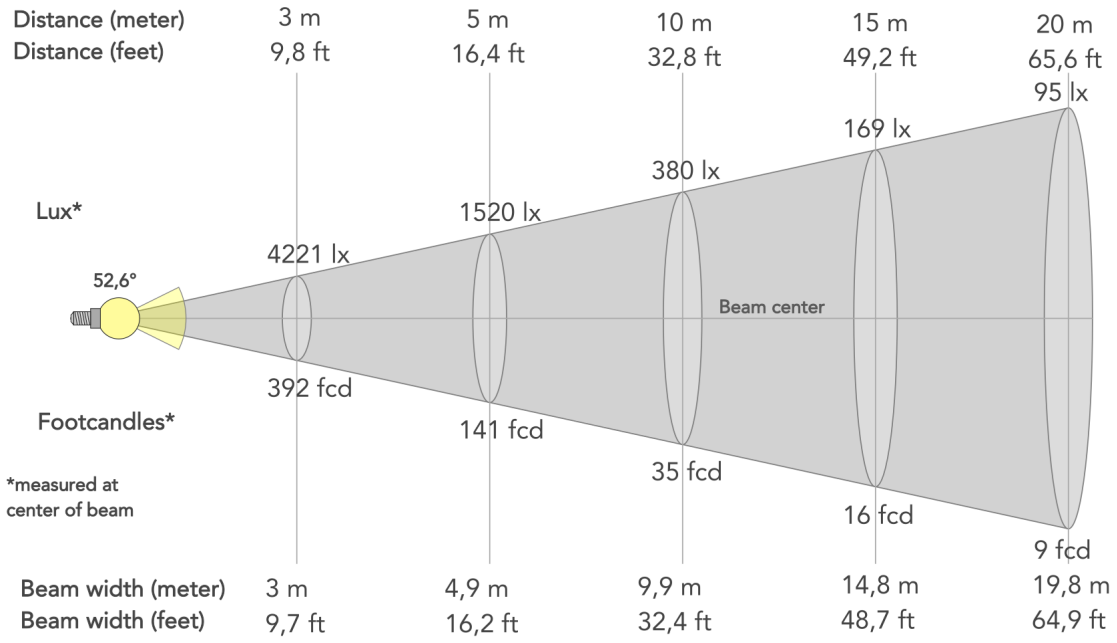

Beam angle (50%): **52.6°**	Field angle (10%): **92.4°**	Cut-off angle (2.5%): **108.2°**

MUSIC & LIGHTS S.r.l. | Via A. Olivetti, snc
04026 - Minturno (LT) ITALY | info@prolights.it
Tel: +39 0771 72190 | **prolights.it**
VAT No. IT 02057590594

Downloaded on 26/11/2026 - data may be provisional: features, specifications and appearance are subject to change without notice