Eclgh

ORDER CODE: **ECLGH**



CARATTERISTICHE PRINCIPALI

- Adatto per i modelli: ECL, ECLFC, ECLHD
- Misure: B-size (Ø86--Ø64,5)

TECHNICAL DRAWINGS

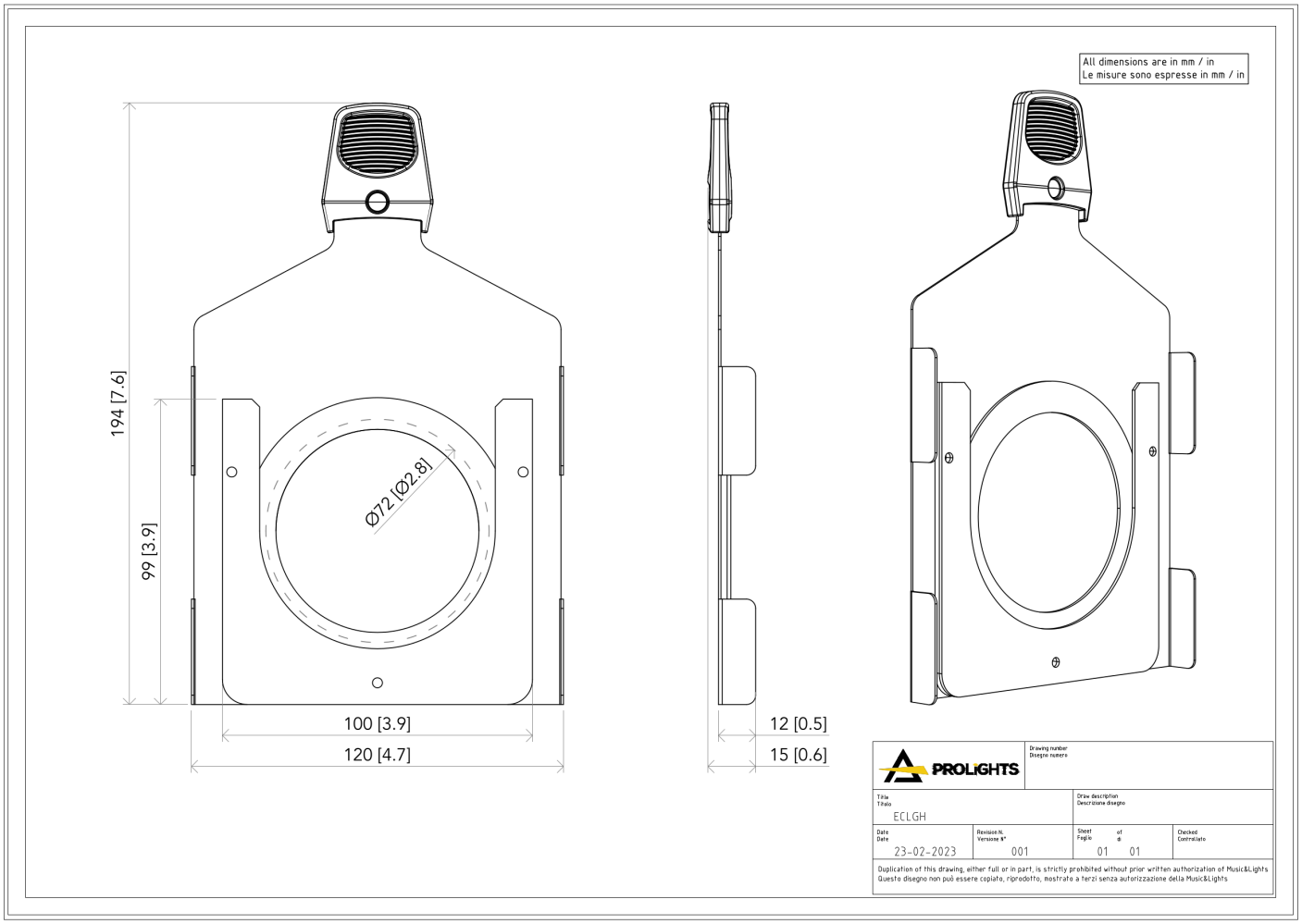

MUSIC & LIGHTS S.r.l.
Via A. Olivetti, snc
04026 - Minturno (LT) ITALY
info@prolights.it
Tel: +39 0771 72190
prolights.it
VAT No. IT 02057590594