# Fy250s

**ORDER CODE:** **FY250S**



## TECHNICAL DRAWINGS

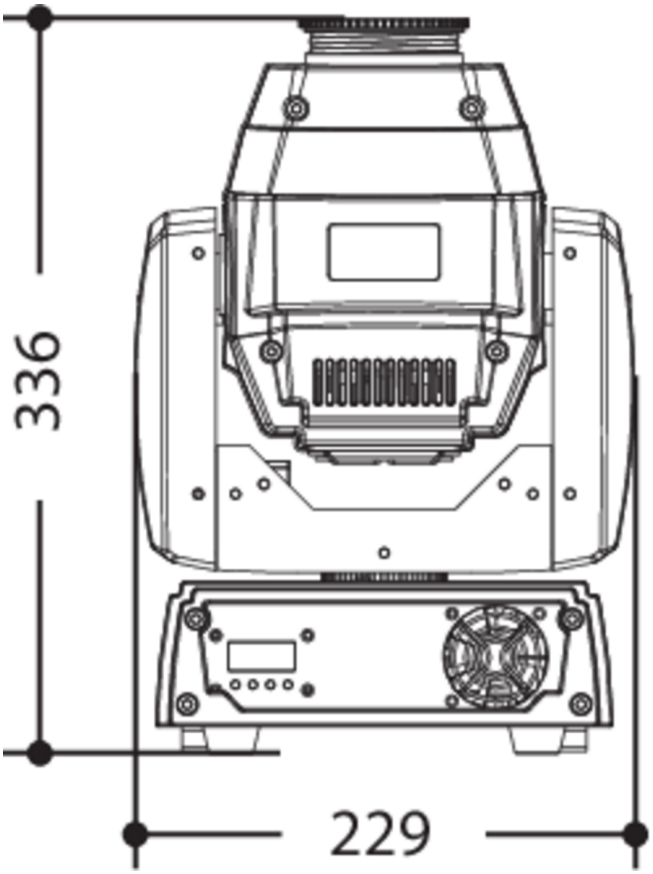


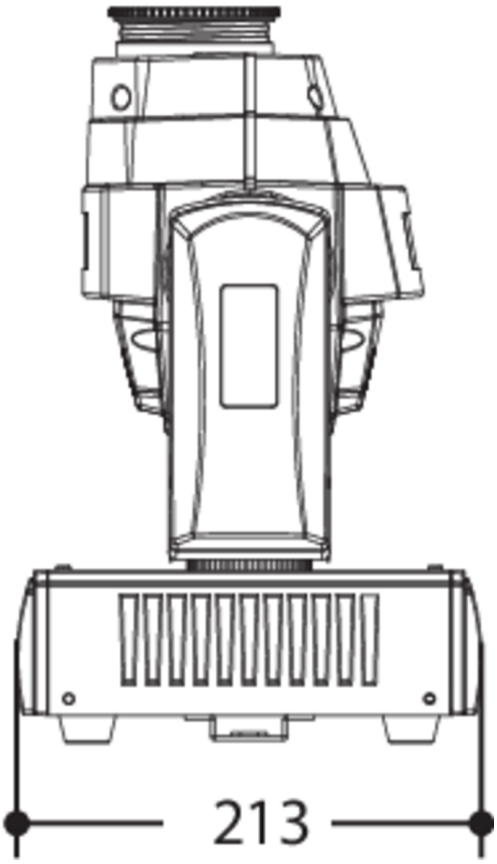


**MUSIC & LIGHTS** S.r.l.
Via A. Olivetti, snc
04026 - Minturno (LT) ITALY
info@prolights.it
Tel: +39 0771 72190
**prolights.it**
VAT No. IT 02057590594