Mfx100l

ORDER CODE: MFX100LWGN



VARIANTI

Code	Angolo	Uso suggerito
 **MFX100LWGN**	**15°**	**Animation wheel and gobo**
 MFX100LWGVW	70°	Animation wheel and gobo
 MFX100LWTM	30°	Animation wheel
 MFX100LWTW	50°	Animation wheel
 MFX100LGBM	30°	Gobo
 MFX100LGBW	50°	Gobo

TECHNICAL DRAWINGS

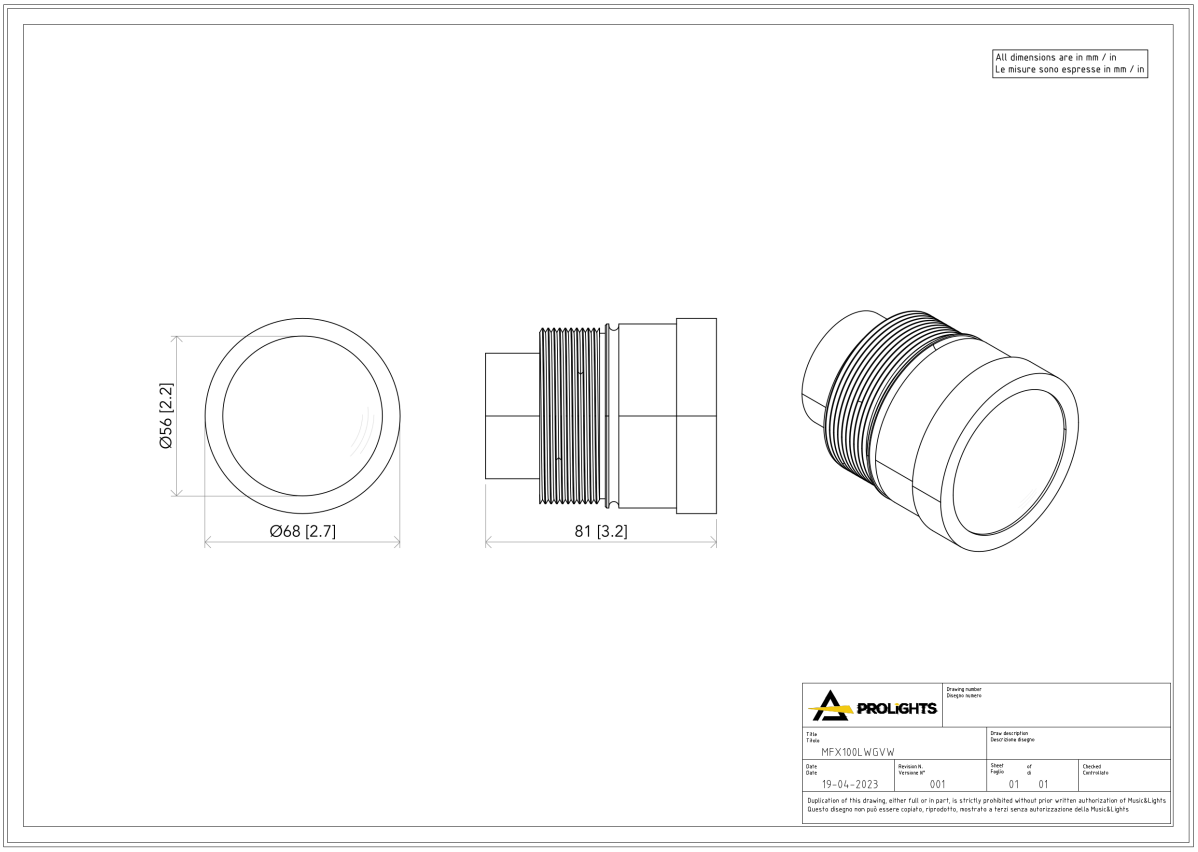

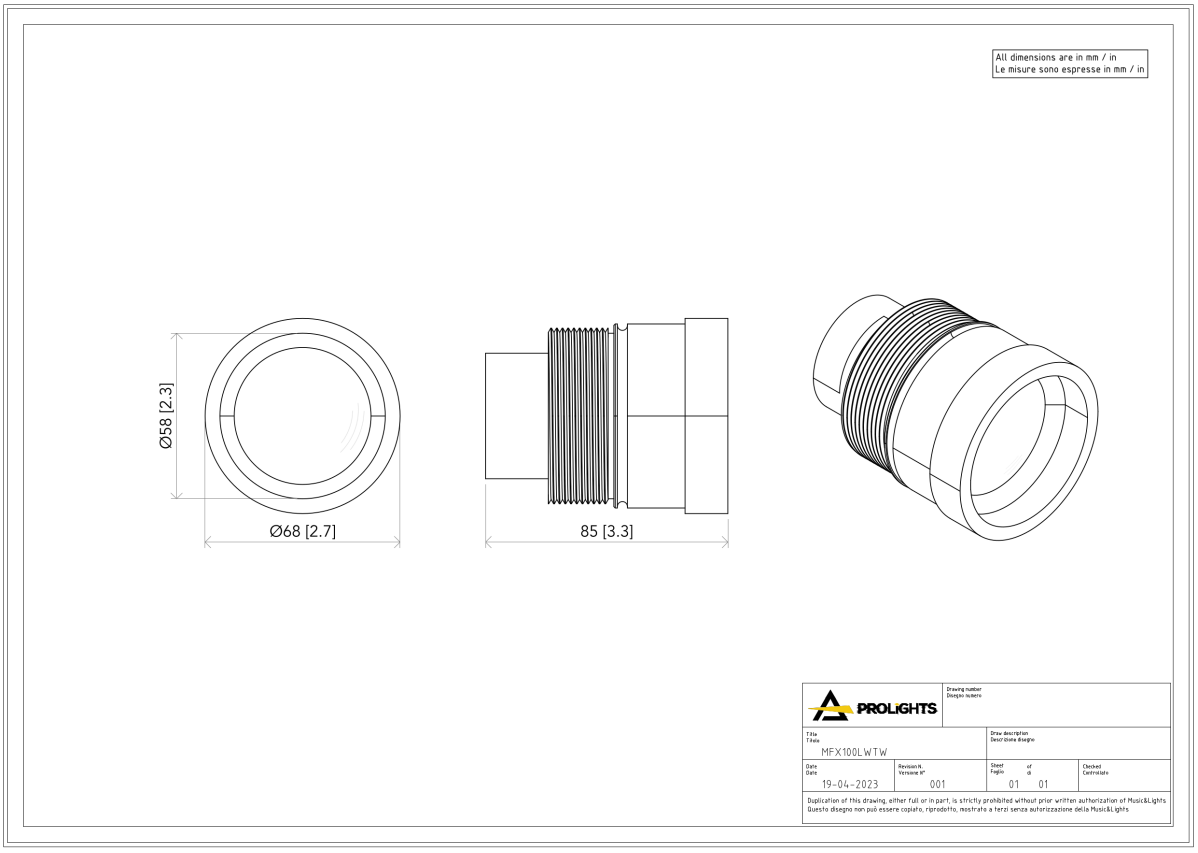

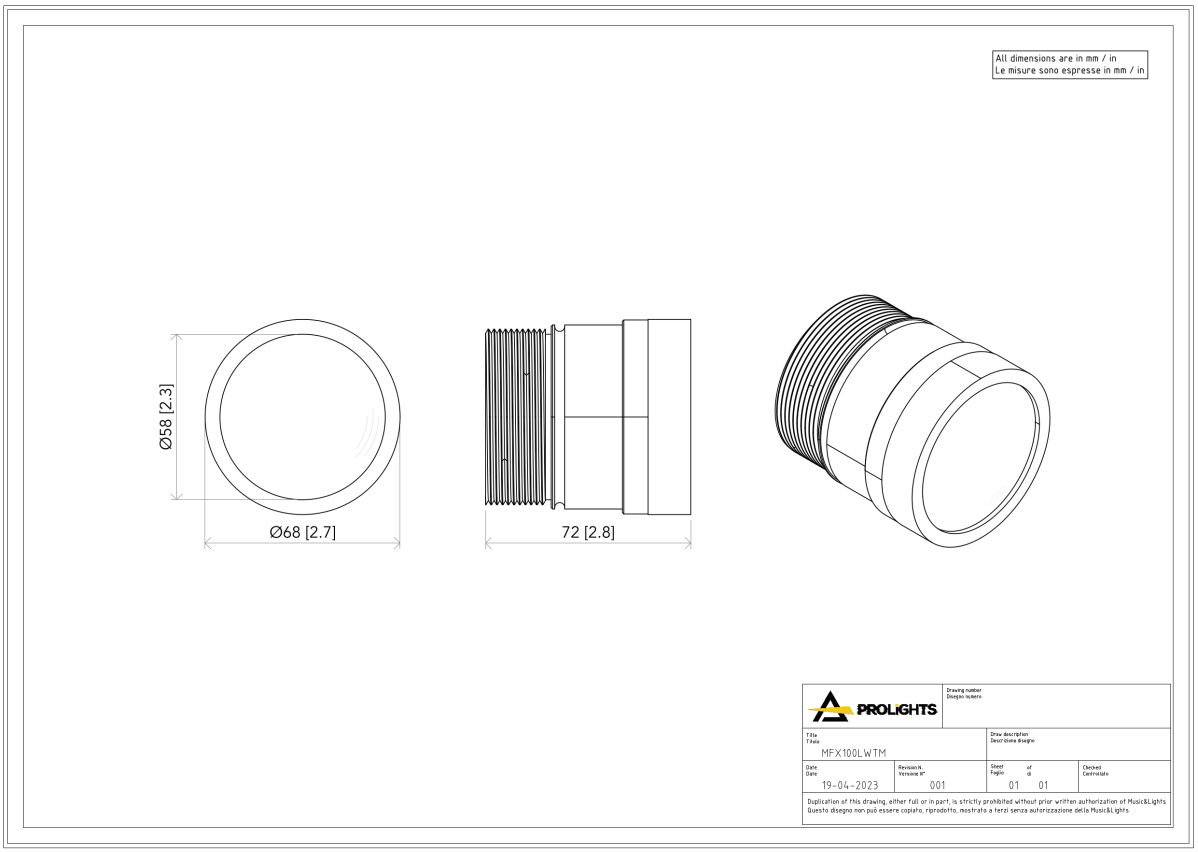
All dimensions are in mm / in
Le misure sono espresse in mm / in
Ø58 [2.3]
Ø68 [2.7]
72 [2.8]
PROLIGHTS
MFX100LWTM
19-04-2023
001
01 01
Duplication of this drawing, either full or in part, is strictly prohibited without prior written authorization of Music&Lights
Questo disegno non può essere copiato, riprodotto, mostrato a terzi senza autorizzazione della Music&Lights

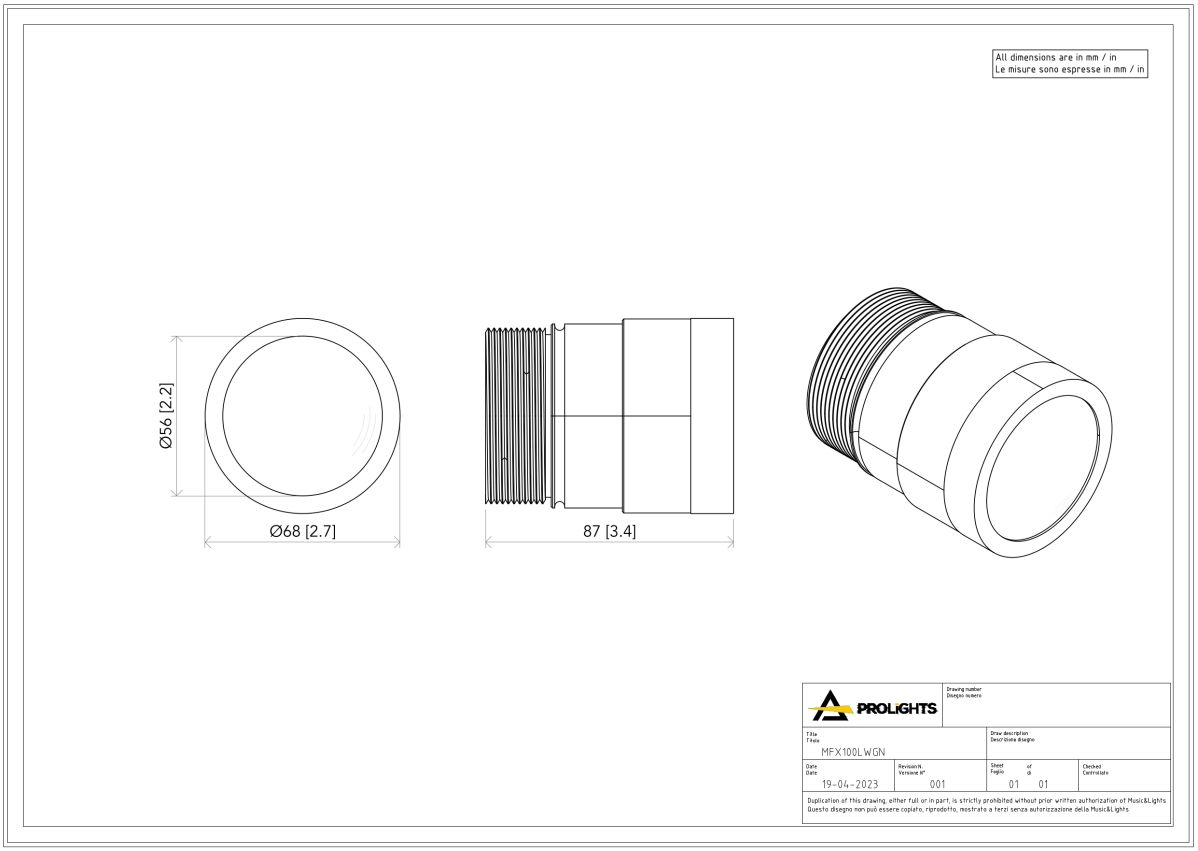
All dimensions are in mm / in
Le misure sono espresse in mm / in
Ø56 [2.2]
Ø68 [2.7]
87 [3.4]
PROLIGHTS
MFX100LWGN
19-04-2023
001
01 01
Duplication of this drawing, either full or in part, is strictly prohibited without prior written authorization of Music&Lights
Questo disegno non può essere copiato, riprodotto, mostrato a terzi senza autorizzazione della Music&Lights